Tolomatic™
EXCELLENCE *IN MOTION*

PNEUMATIC PRODUCTS

ENDURANCE TECHNOLOGY℠
A Tolomatic Design Principle

MAXIMUM DURABILITY

Table of Contents

ABOUT TOLOMATIC


Tolomatic EXCELLENCE IN MOTION
MXP BAND CYLINDER
ENDURANCE TECHNOLOGY
N INTERNAL BEARING
S SOLID BEARING
P PROFILED RAIL

MXP BAND CYLINDER

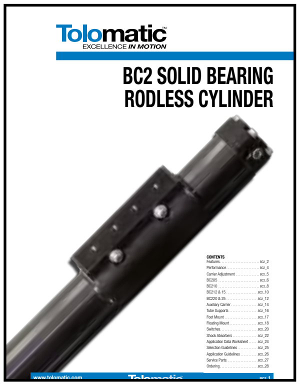
Tolomatic EXCELLENCE IN MOTION
BC2 SOLID BEARING RODLESS CYLINDER

BC2 BAND CYLINDER


Tolomatic EXCELLENCE IN MOTION
BC3 RECIRCULATING BALL BEARING RODLESS CYLINDER

BC3 BAND CYLINDER

NOTE: The BC4 has been discontinued. Consider the Tolomatic MXP-N rodless cylinder, it has similar performance and size.

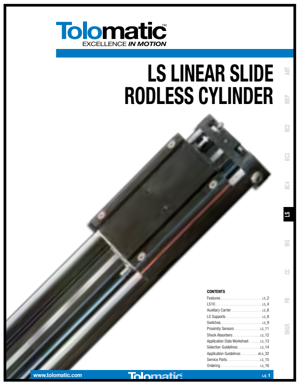
Tolomatic EXCELLENCE IN MOTION
LS LINEAR SLIDE RODLESS CYLINDER

LINEAR SLIDE

Table of Contents

MAG COUPLED CYLINDER & SLIDE

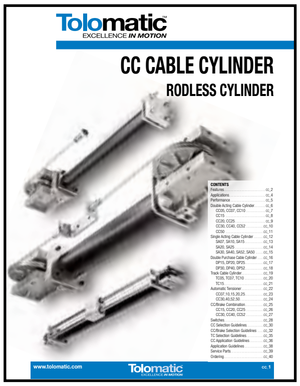

CABLE CYLINDERS

PB & PB2 ROD CYLINDER SLIDES

ENGINEERING RESOURCES

Tolomatic™
EXCELLENCE *IN MOTION*

A legacy of innovatio

It started with a custom solution.

Tolomatic's first product, the Float-A-Shaft®, marked the beginning of Tolomatic's innovative product solutions for the industrial automation market. Burton Toles, Tolomatic's founder, designed the Float-A-Shaft to greatly improve the efficiency of bagger/sealing machinery used in the flour and milling industry. The unique right-angle gear box permitted quick product changeover and is still used today by the thousands!

On the same bagger/sealer machine, customers also wanted a low-cost simple mechanism to lift and sort bags. Again, the Tolomatic solution proved to be a winner with the invention of the cable cylinder – the world's first rodless product. Thus began Tolomatic's product innovation legacy: unique and robust automation component solutions to solve customers' machinery motion challenges.

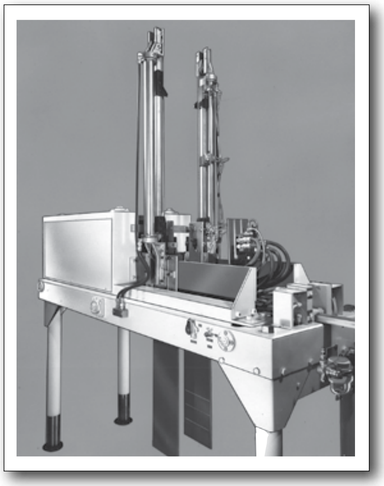

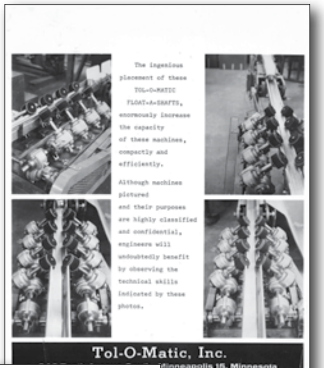

The ingenious placement of these TOL-O-MATIC FLOAT-A-SHAFTS, enormously increase the capacity of these machines, compactly and efficiently.

Although machines pictured and their purposes are highly classified and confidential, engineers will undoubtedly benefit by observing the technical skills indicated by these photos.

Tol-O-Matic, Inc.
Minneapolis 15, Minnesota

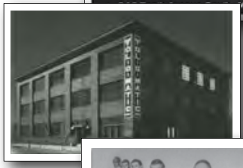

Tolomatic Milestones

- Founded in 1954 by Burton Toles – invented the first right-angle gearbox that floats along the shaft.
- Designed the first rodless cylinder in 1955 – today cable cylinders ship to over 40 countries!
- Introduced the BC2 in 1985 – the world's best selling pneumatic rodless cylinder.
- Tolomatic entered the electric linear motion and controls market in 1992 with its first electric actuators.
- First certified in 1995 Tolomatic is current with ISO 9001:2008 certification.
- In 2004 the top global auto producer selected Tolomatic as its sole worldwide supplier of servo actuators for robotic welding.
- Tolomatic has an expanding portfolio of patents for actuators, mechanical assemblies and manufacturing processes.
- Today Tolomatic automation components, numbering in the hundreds of millions, continue to perform flawlessly in critical applications throughout the world.

n in solving customer needs.

Durable products, built to last with ENDURANCE TECHNOLOGY℠

A Tolomatic Design Principle

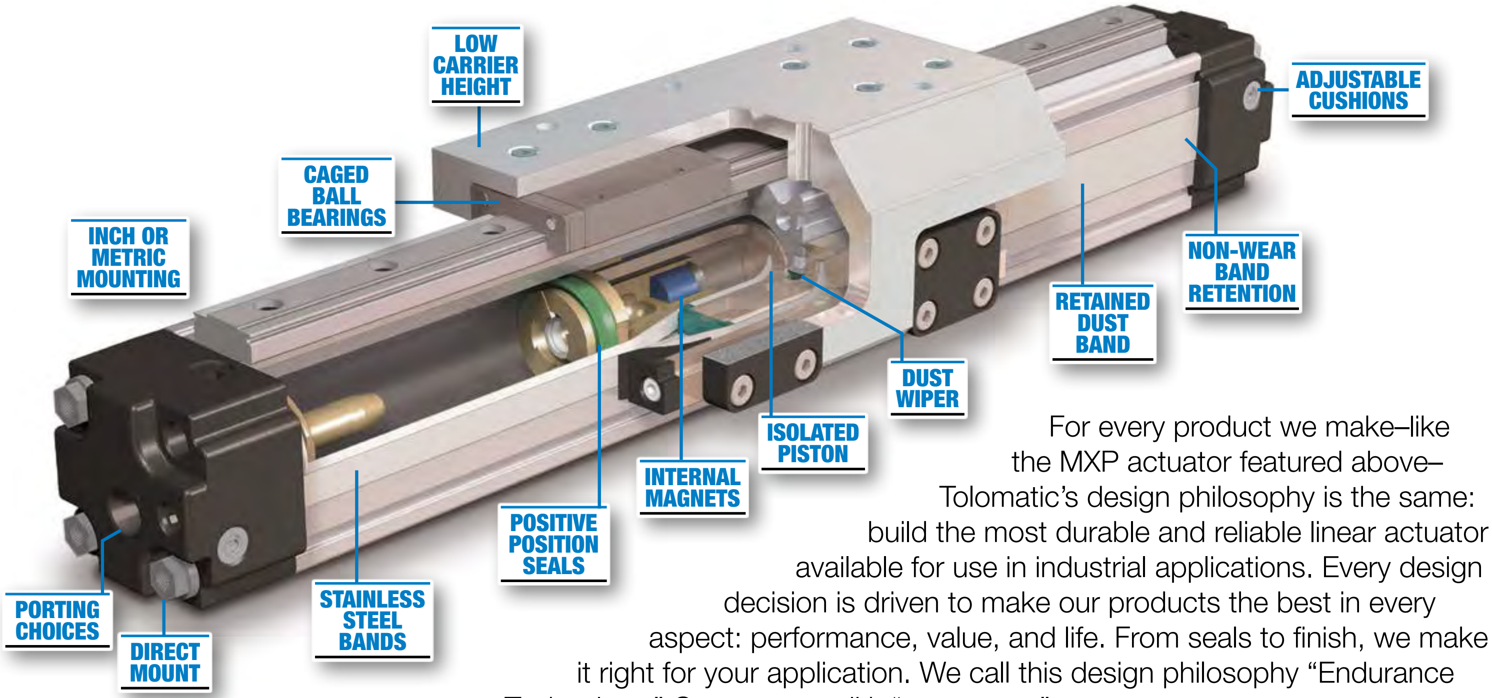

For every product we make–like the MXP actuator featured above–Tolomatic's design philosophy is the same: build the most durable and reliable linear actuator available for use in industrial applications. Every design decision is driven to make our products the best in every aspect: performance, value, and life. From seals to finish, we make it right for your application. We call this design philosophy "Endurance Technology." Customers call it "assurance."

"Your products are built like a tank and run like a deer." – Actual customer quote

Real data. Real specs. Real world.

Products operate in the real world, not in a lab under a controlled environment. Complex and extreme motion profiles are often the norm. This is why Tolomatic rigorously tests products in a variety of operating conditions and provides complete performance information.

Tolomatic wrote the book on actuator life. Visit www.tolomatic.com/resources to view white papers on optimizing service life, selecting the best lead screw and how to avoid sizing mistakes. Want the facts? Turn to Tolomatic.

Thousands of customers ... working in material handling, packaging, medical, food & beverage and automotive ... rely on Tolomatic products to get the job done. Do what they do – turn to Tolomatic for your machinery motion and automation needs.

Go to www.tolomatic.com/resources and get the facts from Tolomatic. Download our latest white papers, guides and technical bulletins.

ENDURANCE TECHNOLOGY℠

A Tolomatic Design Principle

Power Transmission

- *Float-A-Shaft® and Slide-Rite® right-angle gearboxes* turn power around any corner.
- *Caliper disc brakes* in mechanical, hydraulic, pneumatic and spring-applied models offer a wide variety of industrial stopping power.
- *Disc cone clutches* with high torque output and non-slip, dependable performance.

Pneumatic Actuators

- *Largest selection of **rodless cylinders*** in band, cable, and magnetically coupled styles with a wide range of load capacities. We're the only company that offers all three types of rodless cylinders.
- *Rod slides* for maximum force in short stroke packages, perfect for conveyor stops or load lifting applications.

Electric Actuators

- *Rodless screw and belt designs* solve a wide range of moment, load, precision, speed, and performance requirements.
- *A broad range of **rod style actuators***. Offered with acme, ball or roller screws for the force, life and repeatability required. Guided actuator models are available.
- *Integrated rod style actuators* IMA integrates a servo motor with ball & roller screw technologies to deliver a powerful compact actuator.

More solutions. Built to last.

Drives & Motors

- *Servo controllers, drives and motors* provide smooth, quiet operation and high performance.

- *Stepper controllers, drives and motors,* to achieve precise positioning at economical prices.

Customized Products

- *Industry leading quick turnaround on custom modifications* to Tolomatic standard products.

- *Linear motion solutions with custom design and prototype services.*

- *Your Motor Here* program matches a Tolomatic actuator to customer motor and supplies the in-line or reverse-parallel motor adapter device free of charge, mounted and shipped with the actuator.

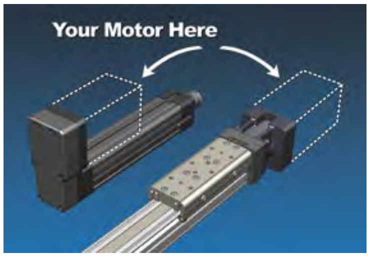

Service & Technical Support

- *Fast service and full technical support.*

- *All pneumatic & power transmission catalog products are built-to-order in the stroke length you specify when you need it.*

FAST DELIVERY
BUILT-TO-ORDER

- *Sizing & selection software and CAD* available online at **www.tolomatic.com**

ACTUATOR SIZING

3D CAD

Tolomatic™
EXCELLENCE *IN MOTION*

Custom, modified

CUSTOM CAPABILITIES

Tolomatic's custom model shop can create first-piece prototypes with the industry's fastest turnaround times.

Custom Solutions are Standard Business

Hundreds of customers partner with Tolomatic to solve unique automation application challenges. We are geared to handle design requests–from our Model Shop (for fast prototypes) all the way through our ISO 9001:2008 certified manufacturing facility. Over 33% of our total business is based on products not found in our standard catalog.

With a mind-set toward innovation, years of solid industry experience, and fast response times, Tolomatic can help you get the job done. If you are looking for linear motion solutions–pneumatic or electromechanical–and you cannot find a catalog product, get with Tolomatic. You will experience what we mean by **Excellence in Motion**.

MATERIAL HANDLING

Conveying machinery with built-in lane diverters offer a compact footprint with optimal performance.

Customer Challenge:

The traditional method of using tie rod cylinders to operate diverters required too much space to fit in space-restrictive production areas.

Tolomatic Solution:

Tolomatic recommended a series of pneumatic rodless band cylinders that could be easily retrofitted into production lines by offering a variety of mounting options. The manufacturer's customers were pleased with the space saving results and durability of the machines. The result was an increase of repeat customers for the manufacturer.

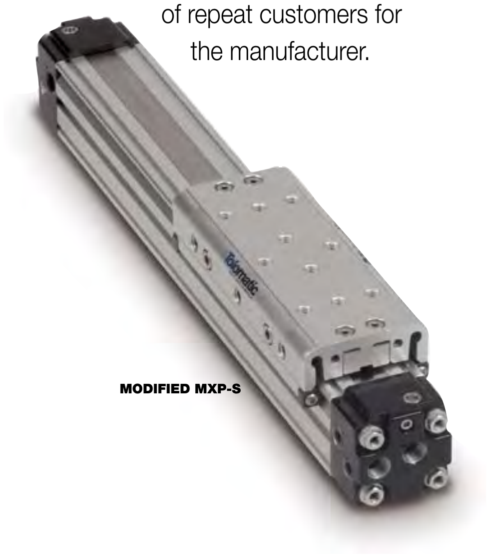

MODIFIED MXP-S

PACKAGING

Modular bagging system fills and seals a wide range of materials and bag sizes.

Customer Challenge:

A leader in packaging technology was faced with the problem of compensating for inconsistent bag dimensions on its modular bag filling and sealing system. Irregularly sized bags required manual setup and were slowing the production process which required high-speed accuracy and flexibility.

Tolomatic Solution:

Tolomatic supplied a series of customized electric screw drive actuators that precisely positioned the incoming bags before insertion into the filling/sealing line. Two actuators adjust the vertical position and two others center the bags in the tray. The results: variations in bag lengths and widths are automatically compensated for eliminating filling, sealing and leakage problems and increasing production.

CUSTOM 2 DIRECTION
ELECTRIC ACTUATOR

Turn to Tolomatic for

and standard product solutions.

MEDICAL

Angiographic-fluid-delivery system combines motion control technology with physician-interactive control.

Customer Challenge:

Power injection systems used in the angiography technique to diagnose coronary disease did not offer the ability to vary the fluid flow rate during injection. A medical company was looking to improve this technology by giving the physician more control of the process and streamline the complexity of equipment setup. Reliable, consistent performance was a key factor.

Tolomatic Solution:

Tolomatic designed a customized rod screw actuator to provide the rigidity, precision and repeatability required for the injection system. The compact design is capable of performing the necessary consistent thrust required for fluid delivery. Physicians are able to easily control and monitor the fluid delivery keeping their focus on diagnosis and treatment.

CUSTOM ELECTRIC ACTUATOR

FOOD & BEVERAGE

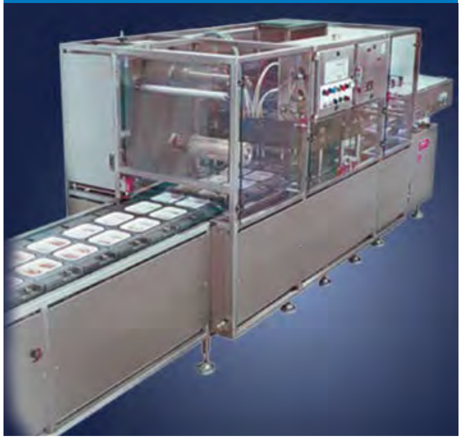

Custom designed high force corrosion resistant actuator for volumetric filling.

Customer Challenge:

A designer and manufacturer of volumetric filling equipment for the food / beverage industry desired to deploy electric actuators to improve performance and minimize product waste. The challenge was to provide an electric actuator that could meet the demanding force, speed and duty cycle requirements with stainless steel construction and IP69K protection.

Tolomatic Solution:

An entirely custom electric actuator was developed by Tolomatic. The solution included a round-bodied actuator made from 316 stainless steel that made it ideal for the wash down operating environment. In addition, Tolomatic deployed high force and long life roller screw technology, heavy duty bearings and corrosion resistant seals while adapting the actuator motor mount to the customer's choice of wash down motor.

CUSTOM STAINLESS STEEL ELECTRIC ACTUATOR

AUTOMOTIVE

Servo actuators used in resistance spot welding (RSW) increase weld quality.

Customer Challenge:

A leading automotive manufacturer was creating a state-of-the-art automotive assembly facility using electric technology. Specifications demanded a servo actuator with precise performance to create the highest quality welds possible. The actuator needed to be compatible with leading robot manufacturer equipment with minimized setup and provide zero maintenance operation over the life of the actuator.

Tolomatic Solution:

Working closely with the customer, Tolomatic developed ServoWeld®, a custom servo actuator with an integral motor. The actuator required no air cooling (a common trait of weld actuators) with zero maintenance. Completely compatible with the top robot manufacturer weld guns, ServoWeld technology proved efficient, durable and helped the customer achieve their 5-star crash rating goal.

GSWA

the best motion control and linear motion solutions for your applications.

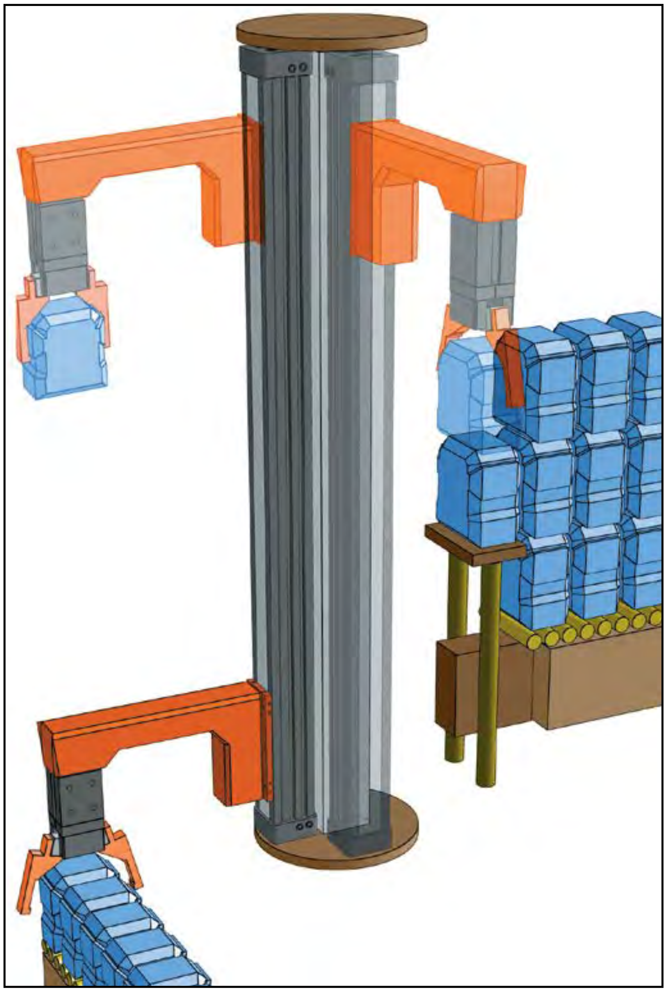

APPLICATION DESCRIPTION:

A manufacturer of ceramic blocks needed a method of stacking and moving heavy blocks for final packing. Speed, and power are critical; end-of-stroke position must be consistent. Tolomatic pneumatic products were chosen for this system.

APPLICATION REQUIREMENTS:

- Fast response; 1 block must be moved and stacked each 3 seconds
- Movement from end-of-stroke to end-of-stroke with consistent positioning
- High power; able to move 43 lb. ceramic blocks
- Low cost

TOLOMATIC SOLUTION:

This application uses a Tolomatic BC3 Band Cylinder. The BC3 was chosen because its high bending moment capacity allows it to support the high overhung load at the distance required.

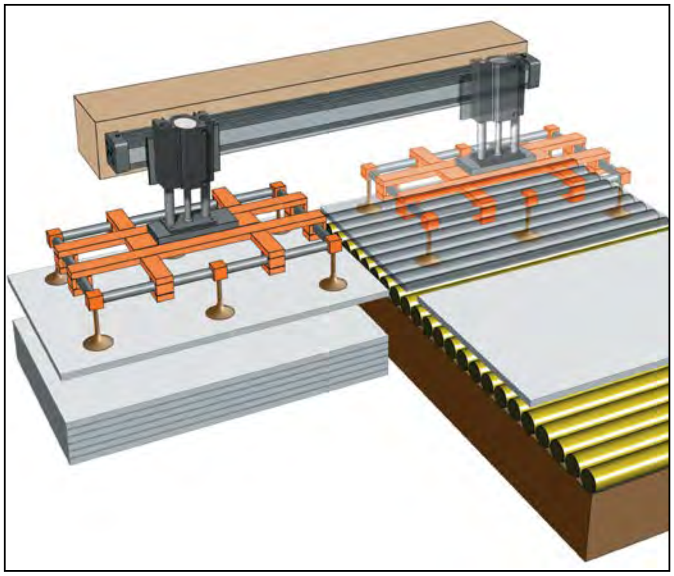

APPLICATION DESCRIPTION:

A manufacturer of battery chargers needed a method of taking sheet metal off of pallets and placing onto the assembly line. Speed is critical and end-of-stroke position must be consistent, thus, Tolomatic pneumatic products were chosen for this system.

APPLICATION REQUIREMENTS:

- Fast response, 1 part must be reoriented and moved each 3 seconds
- Movement from end-of-stroke to end-of-stroke with consistent positioning
- Low cost
- End-of-stroke adjustment

TOLOMATIC SOLUTION:

This application uses a Tolomatic PB2 Rod Cylinder Slide, attached to a BC3 Band Cylinder with adjustable shocks. This actuator assembly moves the vacuum grid attachment that holds the sheet metal.

APPLICATIONS

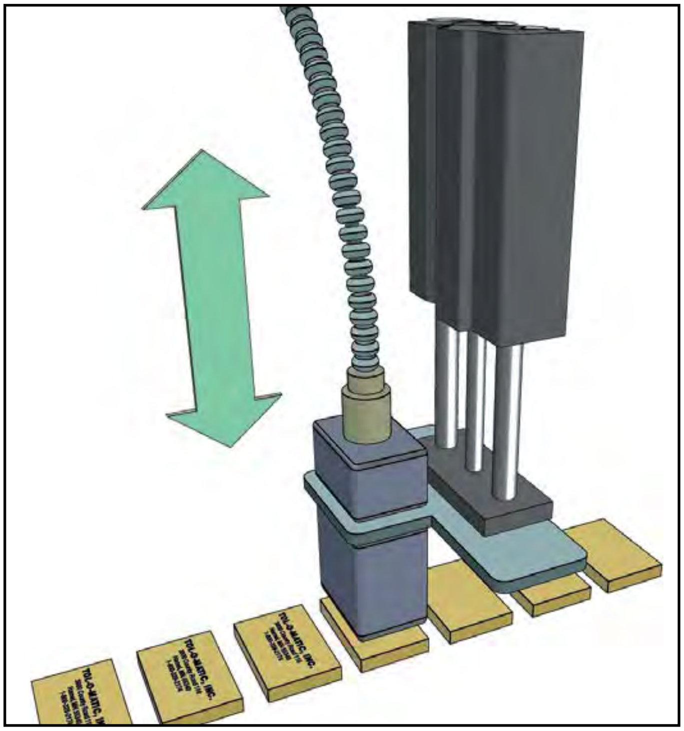

APPLICATION DESCRIPTION:

A manufacturer needed a method to stamp information on a plastic case.

APPLICATION REQUIREMENTS:

- Fast response, less than 1 second
- Movement from end-of-stroke to end-of-stroke with consistent positioning
- Relatively high force applied

TOLOMATIC SOLUTION:

This application uses a single Power-Block2 and custom adapter plate with customer's heat stamper.

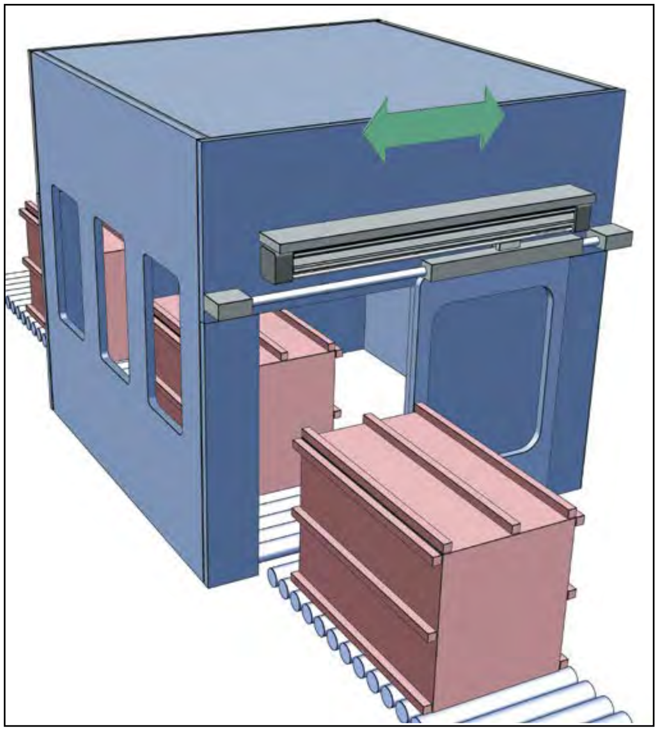

APPLICATION DESCRIPTION:

A manufacturer of automated spray booths needed actuators to open and close the doors on the spray booth. The doors were already guided and supported.

APPLICATION REQUIREMENTS:

- Fast response; doors to open (close) within 2 seconds
- Movement from end-of-stroke to end-of-stroke with consistent positioning
- Low cost
- End-of-stroke cushioning

TOLOMATIC SOLUTION:

This application had used a competitor's band cylinder in previous designs. The MXP-N was chosen because it had the same envelope as the other band cylinder yet offered lower cost, with longer cylinder life. Because thousands of these spray booths are being made, the spray booth manufacturer was able to create a better product and improve its bottom line.

APPLICATIONS

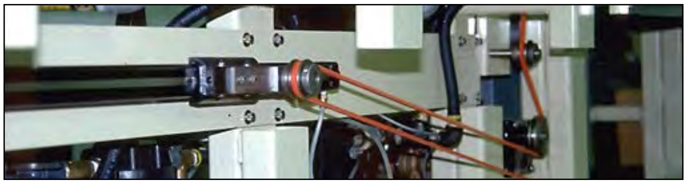

With over 50 years of proven application experience, Tolomatic pneumatic products are key components in the following industries and applications:

INDUSTRY INSTALLATIONS

- Packaging
- Automotive
- Food and Beverage
- Material Handling & Conveying
- Plastic Injection Molding
- Metal Processing
- Paper and Textiles
- Medical
- Electronics
- Printing
- and More …

APPLICATIONS

- Material Handling
- Part Transfer
- Part Advancement
- Part Sorting
- Cutting
- Elevators
- Palletizing
- Door Closure
- Conveyors
- Robotics
- Machine Tools
- General Automation
- and More …

THE RODLESS ADVANTAGE

TOLOMATIC RODLESS BAND CYLINDERS GET THE JOB DONE IN LESS SPACE THAN ROD STYLE CYLINDERS

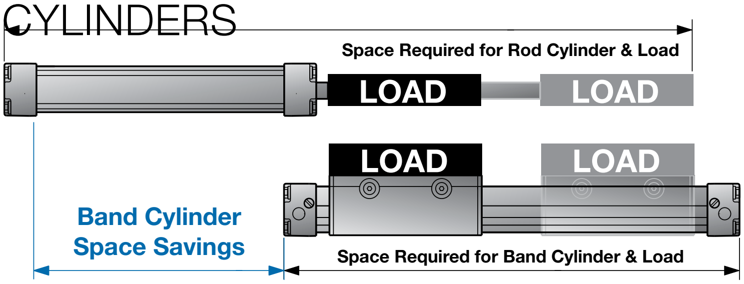

Consider this: A rodless band cylinder contains its stroke within the cylinder itself. A 2" bore cylinder with a 24" stroke can provide a 43% space savings when compared to an equivalently sized rod cylinder. In addition, the load is supported throughout the entire stroke so there is minimal load deflection when compared to rod style cylinders.

With a Tolomatic Band Cylinder, there is no concern about rod rotation. Also, because rodless cylinders have equal piston areas in both directions, the cylinder experiences zero load variation in either direction.

GO RODLESS AND SAVE SPACE!

ROD STYLE vs RODLESS FEATURE COMPARISON

Feature	Tolomatic Rodless	Rod Style
Integrated Load Support	✓	–
Space Saving Design	✓	–
Piston Seals Isolated from Load	✓	–
Internal Air Cushioning	✓	✓

RODLESS CYLINDER COMPARISON

Use this table as a quick reference to help understand the differences and similarities of each product line

ST = *Standard Feature* **OP** = *Optional Feature* **–** = *Not Available*

FEATURE	MXP-N	MXP-S	MXP-P	BC2	BC3	LS	MG	MGS	CC
Stainless Steel Band	ST	ST	ST	ST	ST	ST	–	–	–
Internal Air Cushioning	ST	ST	ST	ST[3]	ST	–	–	–	ST
Internal Polyurethane Bumper	–	–	–	–	–	–	ST	–	–
External Shock Absorbers	OP	OP	OP	OP[1]	OP	OP	–	OP	–
Adjustable Shock Absorbers	OP	OP	OP	OP[1]	OP	–	–	–	–
Caliper Disc Brake	–	–	–	–	–	–	–	–	OP
Foot Mounts	OP	OP	OP	OP	OP	–	OP	–	–
Tube Supports	OP	OP	OP	OP	OP	OP	–	–	–
Floating Mount	OP	OP	–	OP	–	–	OP	–	–
Auxiliary Carrier	OP	OP	OP	OP	OP	OP	–	–	–
Dual 180° Carrier	–	–	–	–	OP	–	–	–	–
Proximity Sensors	–	–	–	–	–	OP	–	OP	–
Long Carrier	–	–	–	–	–	–	–	–	–
Multi-Ported Head	ST	ST	ST	ST[1]	ST	ST	–	ST	OP
Single End Porting	OP[4]	OP[4]	OP[4]	–	ST	ST	–	–	–
Sensors / Switches	OP	OP	OP	OP	OP	OP	OP	OP	OP[2]
Carrier Bearing Type	Engineered Resin	Engineered Resin	Profiled Rail	Engineered Resin	Recirculating Ball Bearing	LS05: Composite LS10: Ball Bearing	–	Composite, Sintered Bronze OR Ball Bearing	–
Piston Isolated From Load	–	ST	ST	ST	ST	ST	ST	ST	ST
Extruded Aluminum Tube	ST	ST	ST	ST	ST	ST	–	–	–

[1] Not available for the BC205 [2] Switches are not available for cable cylinders with steel tube [3] BC205 features external bumper [4] Not available for the MXP16

THE Tolomatic™ DIFFERENCE

EXCELLENCE *IN MOTION*

SUPERIOR CUSTOMER SERVICE

- JUST A PHONE CALL AWAY - Expect prompt, courteous replies to all of your application and product questions. Check us out at 1-800-328-2174

FAST DELIVERY; BUILT-TO-ORDER

- Tolomatic continues to offer the fastest delivery of standard catalog products.

Our products will be there when you need them. **Depend on Tolomatic!**

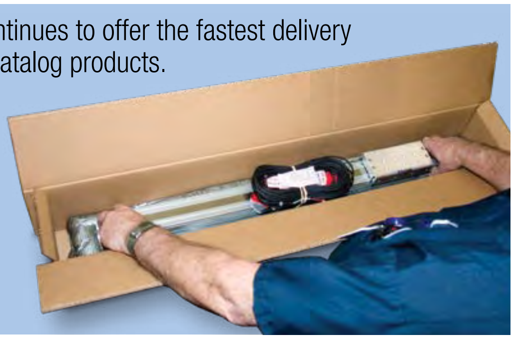

INNOVATIVE PRODUCTS

STANDARD PRODUCTS

Tolomatic offers a complete product line of rodless and slide actuators, rod-style electric actuators, controllers and complete motion systems.

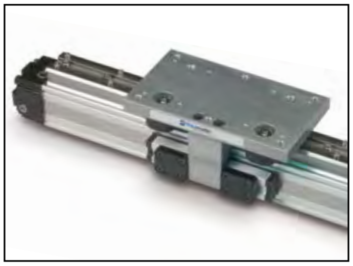

MODIFIED PRODUCTS

Modified products, like this MXP with custom rail and carrier, extend the range of environments and applications where Tolomatic products can be used.

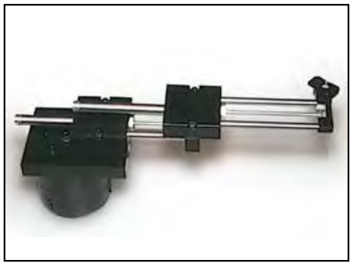

CUSTOM PRODUCTS

Challenges like this multi-axis actuator, built to fit a manufacturer's motion, space and accuracy requirements, are a regular part of our daily activities.

TECHNICAL AND APPLICATION SUPPORT

- COMPLETE INFORMATION AVAILABLE ONLINE - **www.tolomatic.com** - your definitive source for everything you need to know about Tolomatic and our products.

Electric Linear Actuators

Electric linear actuators, servo and stepper motors, roller screws

Pneumatic Actuators

Rodless pneumatic actuators and rod linear thrusters

ServoWeld® Actuators

Servo actuators for robotic resistant spot welding

Power Transmission

Roller screws, caliper disc brakes, right-angle gearboxes

CONTACT AN ENGINEER

Have your technical questions answered quickly by one of our expert application engineers.

ACTUATOR SIZING

Size and select Tolomatic electric actuators with our easy-to-use online software.

CAD LIBRARY

Download 2D or 3D CAD files for Tolomatic products.

YOUR MOTOR HERE®

Select the motor of your choice and your actuator ships with the appropriate mounting plates and couplers for quick and easy install.

FIND A DISTRIBUTOR

Find the Tolomatic Distributor nearest you.

ELECTRIC ACTUATORS E-BOOK

Education and tips on how to best integrate electric actuators into your machine design.

3D MODELS & 2D DRAWINGS

Available in all common formats.

SIZING & SELECTION

Step by step instructions, specifications and performance data for every electric product.

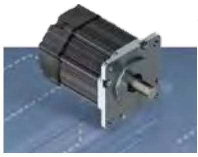

YOUR MOTOR HERE

Your Motor Here is a program to make mounting most standard motors to appropriately sized actuators easy and seamless.

Tolomatic™
EXCELLENCE *IN MOTION*

MXP BAND CYLINDER

ENDURANCE TECHNOLOGY℠
A Tolomatic Design Principle

N INTERNAL BEARING
S SOLID BEARING
P PROFILED RAIL

CONTENTS

INTRODUCING THE MXP BAND CYLINDER – DESIGNED TO OUTLAST EVERY RODLESS CYLINDER ON THE MARKET

The MXP pneumatic rodless cylinder is exactly what you expect from the industry's number one rodless supplier. Designed with our exclusive ENDURANCE TECHNOLOGY℠ features, the MXP delivers superior performance to meet the most demanding applications. Nobody knows rodless like Tolomatic, and the MXP proves it.

- **DURABLE BEARINGS.** Three bearing choices to match your application needs. Profiled rail design reduces friction and extends actuator life. Solid bearing design reduces stress concentration for optimum performance. Internal bearing design is permanently lubricated for long, trouble-free service.

- **DURABLE BANDS.** Stainless steel bands are stronger and will not elongate like elastomer (non-metallic) bands, providing reliable sealing over the life of the actuator.

N-INTERNAL BEARING

- Low cost solution for applications with limited load and bending moment requirements
- Lowest breakaway pressure
- Best in many vertical applications
- Permanently lubed internal bearing

S-SOLID BEARING

- Increased Mx moment capacity
- Large bearing surface contact area optimizes stress distribution on bearing for long service life
- Large carrier mounting pattern for more load stability and compatibility with existing BC2 applications
- Engineered bearing material does not require additional lubrication
- Solid bearings are field replaceable

P-PROFILED RAIL

- Recirculating ball bearing design offers reduced friction for reliable service life
- High load and bending moment capacities
- Low profile to fit your application
- High precision bearings feature smooth, low breakaway motion

SELECT THE PERFORMANCE YOU NEED

Choose from: • Three Bearing Models • Six Bore Sizes • Built to Your Specified Stroke Length!

MOMENT & LOAD CAPACITY COMPARISON

Graph for model comparison, data from MXP40, 38mm (1.5") bore

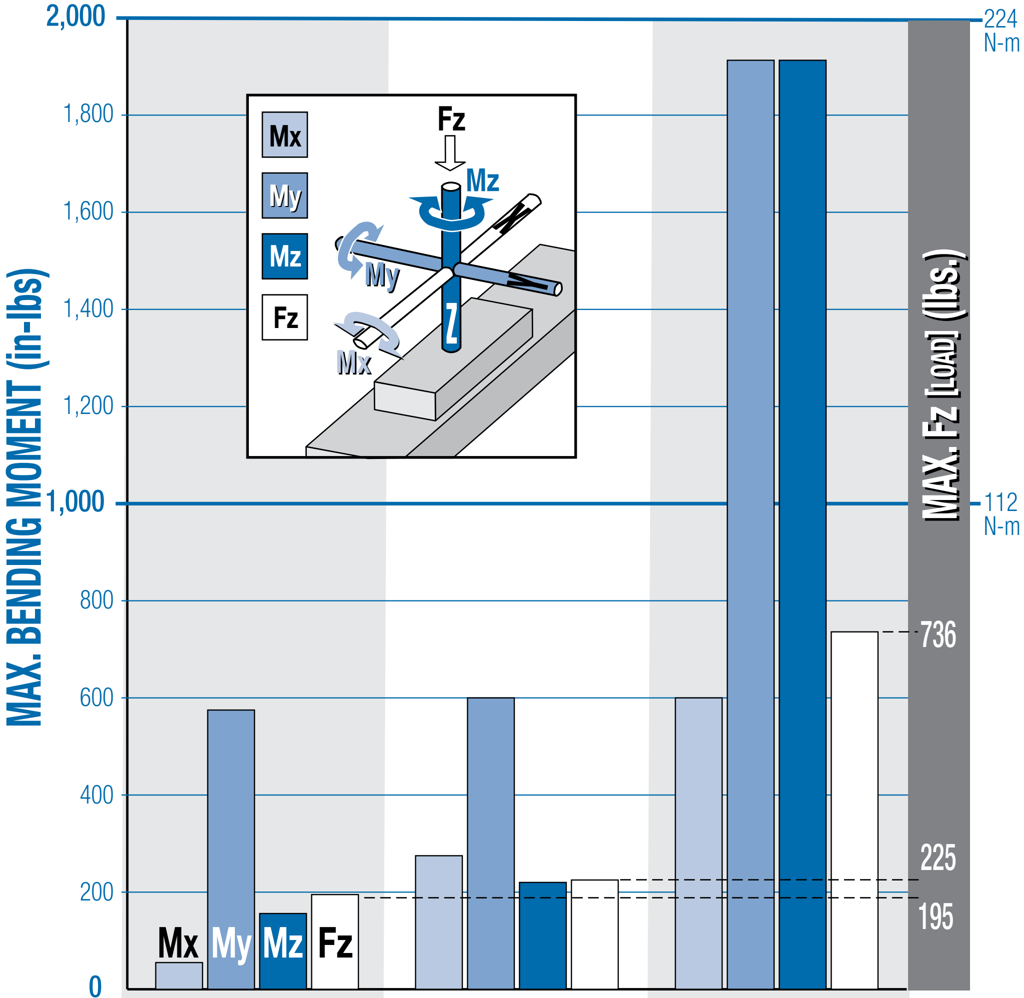

	N	S	P
Tolomatic MXP Band Cylinder Model			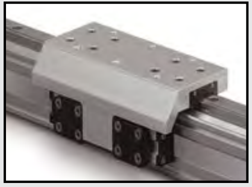
Bearing Type	Internal Bearing	Solid Bearing	Profiled Rail
Moment Capacity	Moderate	Moderate + Mx	High
Isolated Piston	No	Yes	Yes
Ideal Applications	• Guided Loads • Vertical Orientation	• Side Loads • Impact Loads	• High Moment Loads • High Speeds with Heavy Loads • High Precision
Product Details	Page MXP_6	Page MXP_8	Page MXP_10

ABT
MXP
BC2
BC3
BC4
LS
MG
CC
PB
ENGR

N INTERNAL BEARING

ENDURANCE TECHNOLOGY℠

A Tolomatic Design Principle

STAINLESS STEEL BANDS

- Both interior sealing band and exterior dust band made of fatigue resistant stainless steel
- Does not stretch like bands made of rubber or polymer materials
- Stainless steel sealing bands resist blow out during pressure spikes that may occur during high velocity cushioning

STAINLESS STEEL IS DURABLE, FLEXIBLE AND CORROSION RESISTANT

RETAINED DUST BAND

Retained dust band keeps contaminants from entering the cylinder interior, protecting components for reduced maintenance and increased uptime

INTERNAL BEARINGS

- Design maximizes piston bearing surface area for less pressure on bearing surfaces, less pressure results in less wear
- Permanent lubrication for low friction and extended bearing life
- Internal location provides protection from external contaminants, extending life

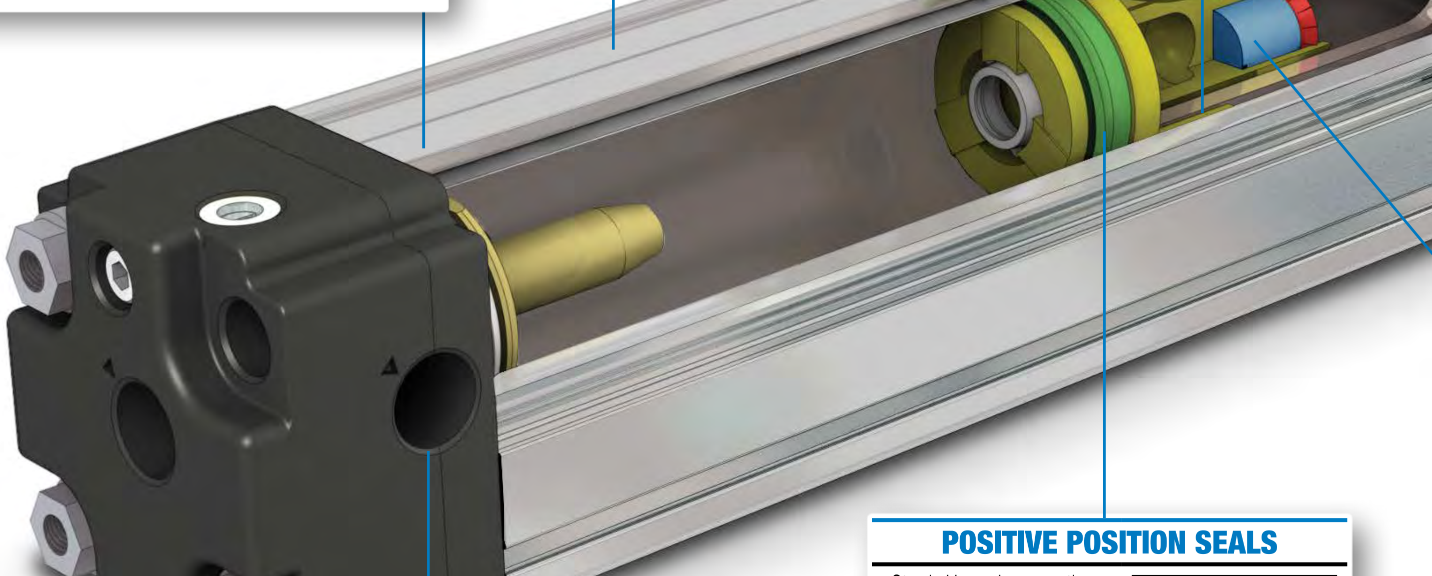

POSITIVE POSITION SEALS

- Sturdy U-cup base section assures positive positioning of seal lip for better sealing and less wear
- Made of custom formulated polyurethane for pliable, wear resistant seal lip

DIRECT MOUNT

Head bolts are tapped for direct mounting

PORTING CHOICES

- 4-ported heads are standard to allow air connections on sides, end or bottom
- Single-end porting allows convenient one end air connection
- NPT, Metric Parallel (ISO-G/BSP) & Metric Taper (Rc/BST) available on both metric and inch (US standard) mount actuators

INCH OR METRIC MOUNTING

Your choice of inch (US standard) or metric fasteners for carrier and head bolt mounting

Tolomatic™ …MAXIMUM DURABILITY

EXCELLENCE *IN MOTION*

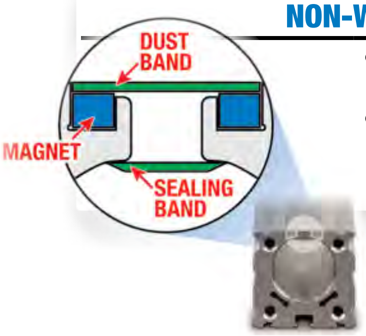

NON-WEAR BAND RETENTION

- Magnetically retained bands are not subject to wear as are mechanically retained systems
- Immediate band engagement and release results in less drag on piston for lower breakaway force during initial carrier movement

ADJUSTABLE CUSHIONS

- Easy screw adjustment for smooth deceleration protecting actuator from high stress at end-of-stroke
- Adjustable cushions with retained stainless steel needle screw for increased safety

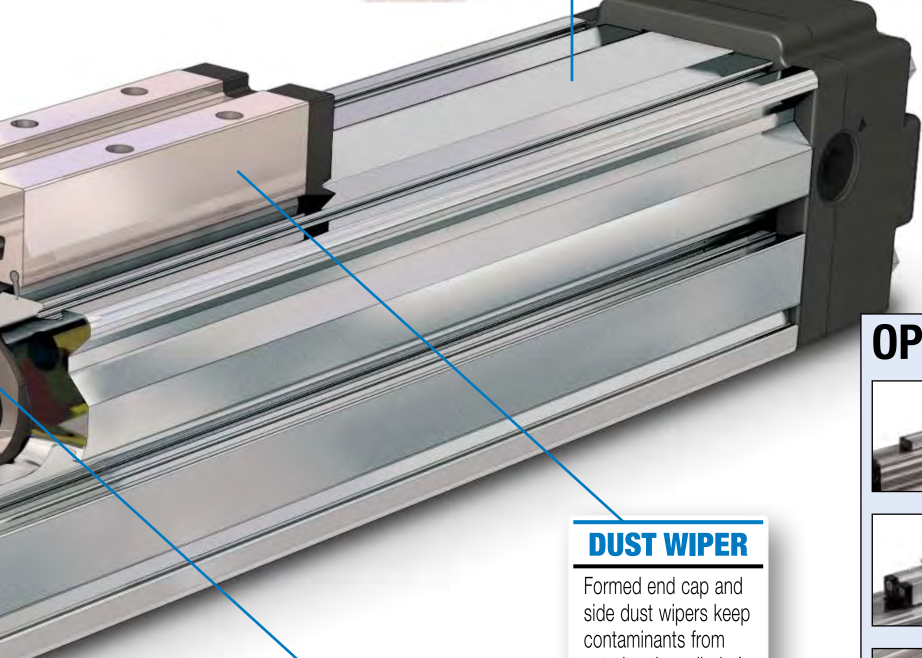

DUST WIPER

Formed end cap and side dust wipers keep contaminants from entering the cylinder's internal area

HIGH STRENGTH PISTON

- Single piece extrusion for piston bracket and carrier reduces failure points
- Piston bracket neck cross-sectional area is up to 28% greater than competitive designs, providing increased durability

25mm PISTON BRACKET MINIMUM CROSS-SECTIONAL AREA (mm²)

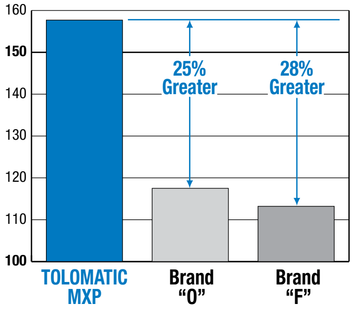

INTERNAL MAGNETS

Standard feature that allows sensor installation on left, right or bottom of the extrusion

NOTE: Boxed letters indicate ordering codes

OPTIONS

AUXILIARY CARRIER D W

- 2X higher Fz (load) capacity
- High bending moment capacity

FLOATING MOUNT F L

- Compensates for non-parallelism between MXP band cylinder and externally guided load

TUBE CLAMPS T C

- Used for intermediate support
- Flush with bottom of actuator to retain low profile
- Drop-in, adjustable mounting locations

FOOT MOUNTS F M

- For end mounting of MXP band cylinder
- Use to bottom or side mount actuator

SHOCK ABSORBERS A L S L A H S H

- Allows increased operating speed and load
- Self-compensates for load or speed changes
- Minimizes impact load to equipment
- Fixed or adjustable position shocks

SINGLE-END PORTING S

- Convenient single-end air connection (not available on MXP16)

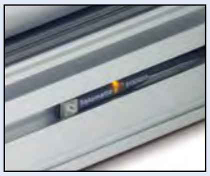

SWITCHES

- Wide variety of sensing choices: Reed, Solid State PNP or NPN, all available normally open or normally closed
- Flush mount, drop-in installation, anytime
- Bright LEDs, power & signal indication
- CE rated, RoHS compliant

S SOLID BEARING

ENDURANCE TECHNOLOGY℠

A Tolomatic Design Principle

Endurance Technology features are designed for maximum durability to provide extended service life.

STAINLESS STEEL BANDS

- Both interior sealing band and exterior dust band made of fatigue resistant stainless steel
- Does not stretch like bands made of rubber or polymer materials
- Stainless steel sealing bands resist blow out during pressure spikes that may occur during high velocity cushioning

STAINLESS STEEL IS DURABLE, FLEXIBLE AND CORROSION RESISTANT

POSITIVE POSITION SEALS

- Sturdy U-cup base section assures positive positioning of seal lip for better sealing and less wear
- Made of custom formulated polyurethane for pliable, wear resistant seal lip

INTERNAL MAGNETS

Standard feature that allows sensor installation on left, right or bottom of the extrusion

RETAINED DUST BAND

Retained dust band keeps contaminants from entering the cylinder interior, protecting components for reduced maintenance and increased uptime

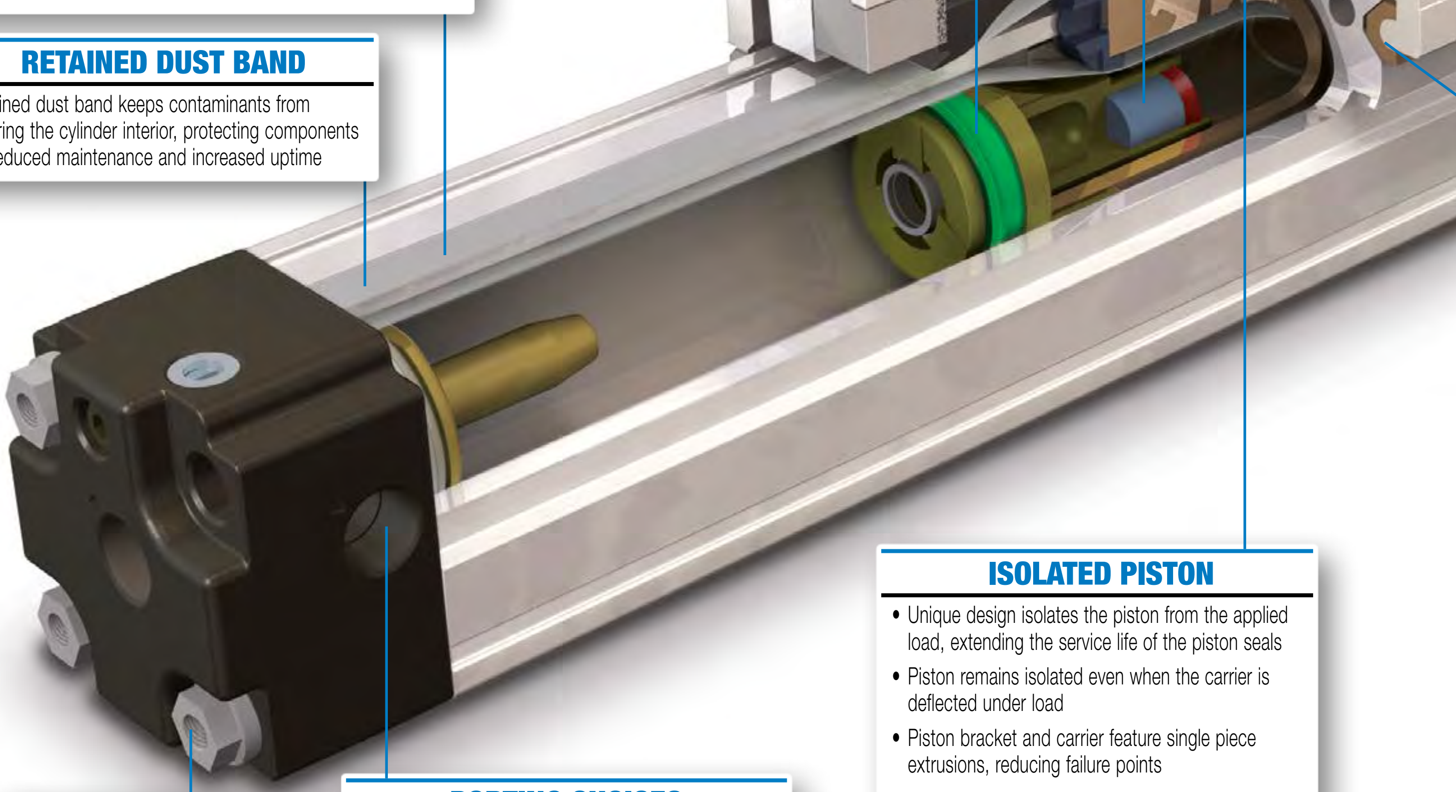

ISOLATED PISTON

- Unique design isolates the piston from the applied load, extending the service life of the piston seals
- Piston remains isolated even when the carrier is deflected under load
- Piston bracket and carrier feature single piece extrusions, reducing failure points

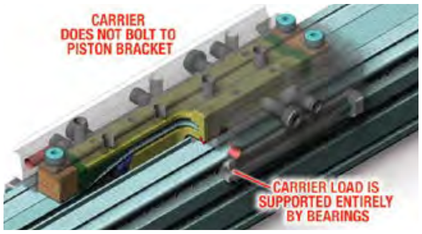

DIRECT MOUNT

Head bolts are tapped for direct mounting

PORTING CHOICES

- 4-ported heads are standard to allow air connections on sides, end or bottom
- Single-end porting allows convenient one end air connection
- NPT, Metric Parallel (ISO-G/BSP) & Metric Taper (Rc/BST) available on both metric and inch (US standard) mount actuators

INCH OR METRIC MOUNTING

Your choice of inch (US standard) or metric fasteners for carrier and head bolt mounting

Tolomatic …MAXIMUM DURABILITY

EXCELLENCE IN MOTION

DUST WIPER

Formed end cap and side dust wipers keep contaminants from entering the cylinder's internal area

ADJUSTABLE CUSHIONS

- Easy screw adjustment for smooth deceleration protecting actuator from high stress at end-of-stroke
- Adjustable cushions with retained stainless steel needle screw for increased safety

NON-WEAR BAND RETENTION

- Magnetically retained bands are not subject to wear as are mechanically retained systems
- Immediate band engagement and release results in less drag on piston for lower breakaway force during initial carrier movement

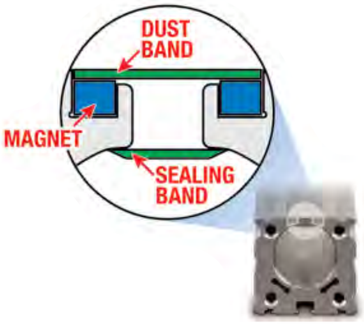

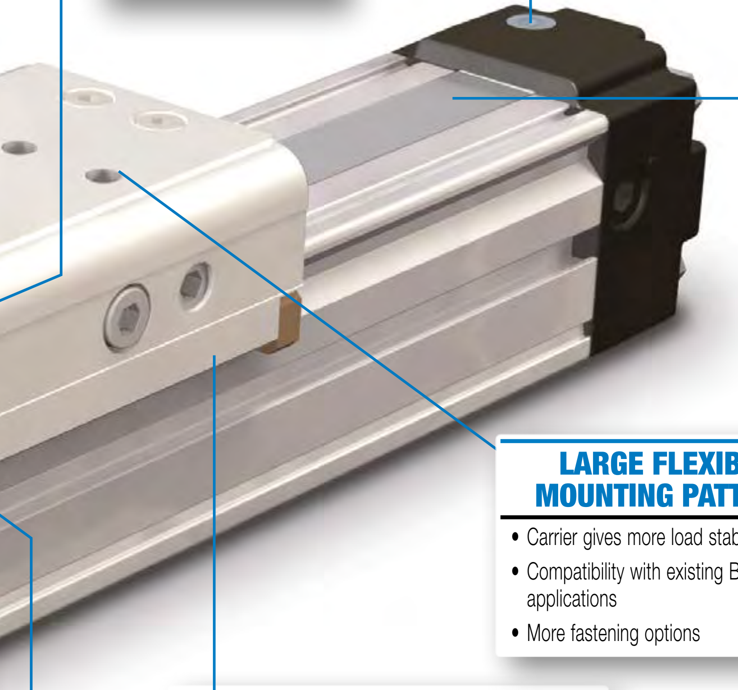

LARGE FLEXIBLE MOUNTING PATTERN

- Carrier gives more load stability
- Compatibility with existing BC2 applications
- More fastening options

NON-BINDING BEARING ARMS

Bearings are tensioned indirectly, providing bind free adjustment

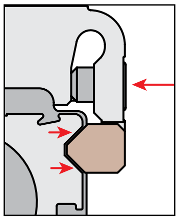

TRAPEZOIDAL BEARINGS

- Trapezoidal design maximizes bearing surface area for less pressure on bearing surfaces; less pressure results in less wear
- Engineered bearing material has low static and dynamic friction with low wear properties for long lasting, smooth operation
- Bearings are field replaceable for extended service life

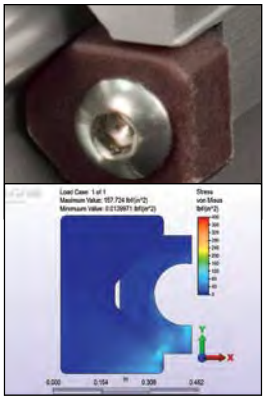

NOTE: Boxed letters indicate ordering codes

OPTIONS

AUXILIARY CARRIER $\boxed{D}\boxed{W}$

- 2X higher Fz (load) capacity
- High bending moment capacity

FLOATING MOUNT $\boxed{F}\boxed{L}$

- Compensates for non-parallelism between MXP band cylinder and externally guided load

TUBE CLAMPS $\boxed{T}\boxed{C}$

- Used for intermediate support
- Flush with bottom of actuator to retain low profile
- Drop-in, adjustable mounting locations

FOOT MOUNTS $\boxed{F}\boxed{M}$

- For end mounting of MXP band cylinder
- Use to bottom or side mount actuator

SHOCK ABSORBERS $\boxed{A}\boxed{L}$ $\boxed{S}\boxed{L}$ $\boxed{A}\boxed{H}$ $\boxed{S}\boxed{H}$

- Allows increased operating speed and load
- Self-compensates for load or speed changes
- Minimizes impact load to equipment
- Fixed or adjustable position shocks

SINGLE-END PORTING $\boxed{S}$

- Convenient single-end air connection (not available on MXP16)

SWITCHES

- Wide variety of sensing choices: Reed, Solid State PNP or NPN, all available normally open or normally closed
- Flush mount, drop-in installation, anytime
- Bright LEDs, power & signal indication
- CE rated, RoHS compliant

P PROFILED RAIL

ENDURANCE TECHNOLOGY℠

A Tolomatic Design Principle

Endurance Technology features are designed for maximum durability to provide extended service life.

RECIRCULATING BALL BEARINGS

- Recirculating ball bearings are used to reduce friction and extend actuator life
- Ball bearings with a grease pocket between ball elements, reduces friction, noise and maintenance
- Large permissible moment loads
- Low profile recirculating ball bearings
- High speed operation, low heat generation
- High precision, smooth, low friction motion

INTERNAL MAGNETS

Standard feature that allows sensor installation on left, right or bottom of the extrusion

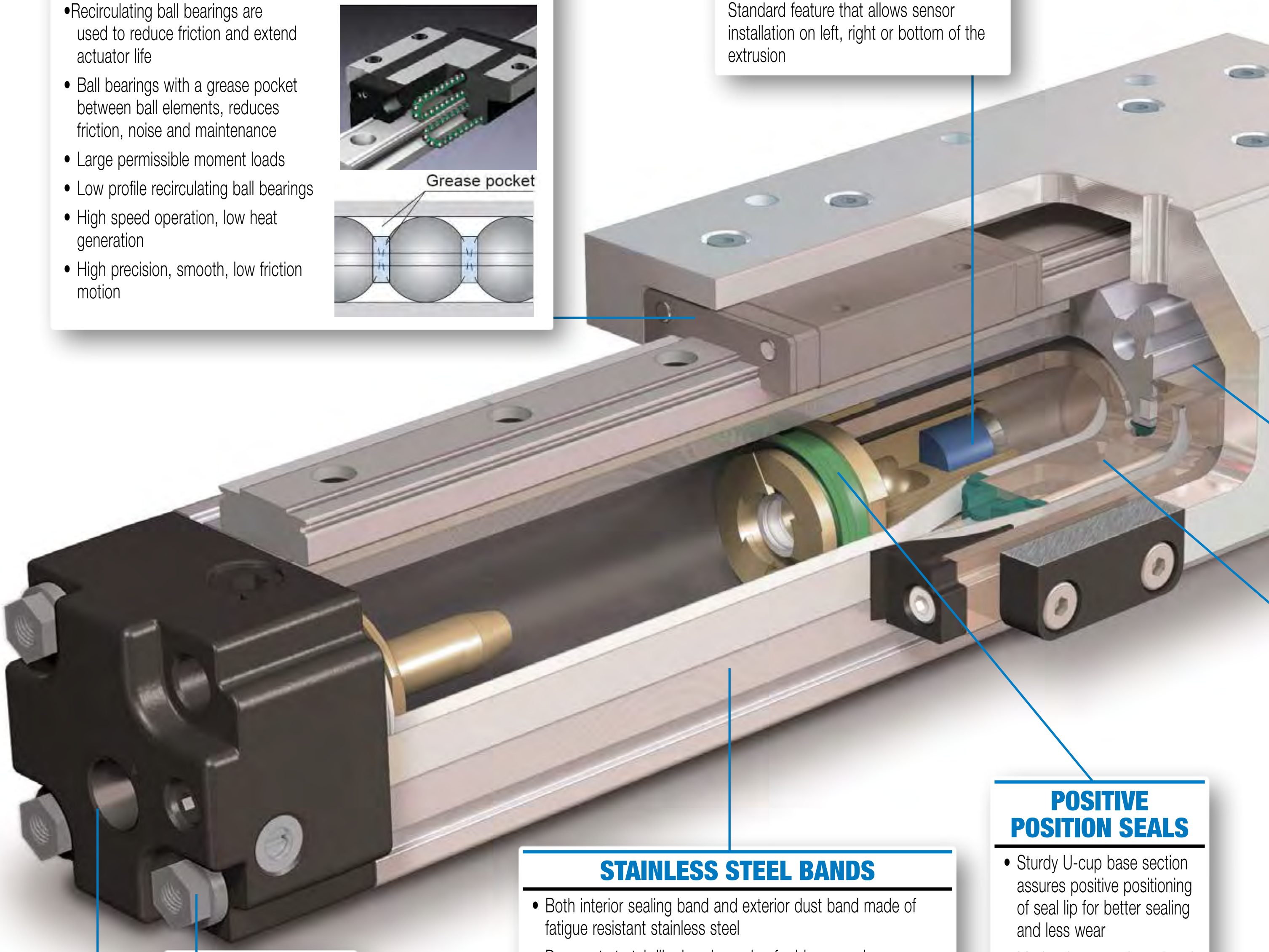

POSITIVE POSITION SEALS

- Sturdy U-cup base section assures positive positioning of seal lip for better sealing and less wear
- Made of custom formulated polyurethane for pliable, wear resistant seal lip

STAINLESS STEEL BANDS

- Both interior sealing band and exterior dust band made of fatigue resistant stainless steel
- Does not stretch like bands made of rubber or polymer materials
- Stainless steel sealing bands resist blow out during pressure spikes that may occur during high velocity cushioning

STAINLESS STEEL IS DURABLE, FLEXIBLE AND CORROSION RESISTANT

DIRECT MOUNT

Head bolts are tapped for direct mounting

PORTING CHOICES

- 4-ported heads are standard to allow air connections on sides, end or bottom
- Single-end porting allows convenient one end air connection
- NPT, Metric Parallel (ISO-G/BSP) & Metric Taper (Rc/BST) available on both metric and inch (US standard) mount actuators

INCH OR METRIC MOUNTING

Your choice of inch (US standard) or metric fasteners for carrier and head bolt mounting

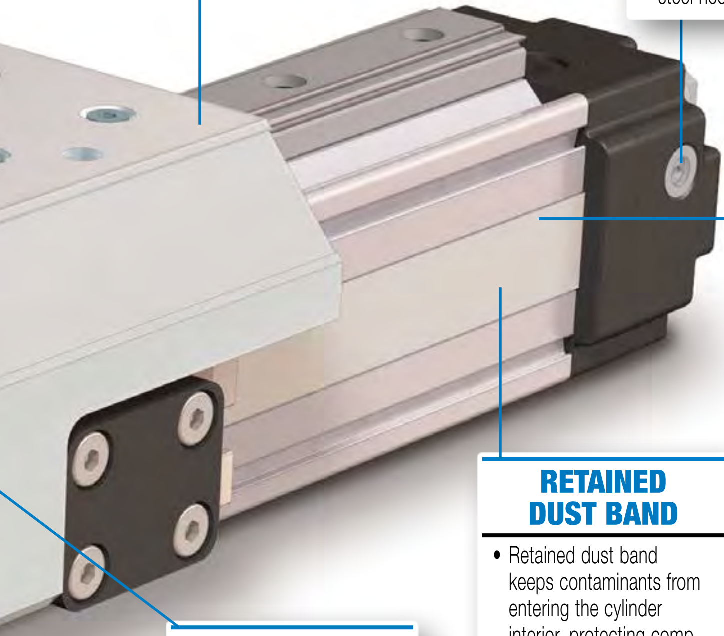

LOW CARRIER HEIGHT

- Reduces overall cylinder envelope
- Large mounting pattern for high load stability

ADJUSTABLE CUSHIONS

- Easy screw adjustment for smooth deceleration protecting actuator from high stress at end-of-stroke
- Adjustable cushions with retained stainless steel needle screw for increased safety

NON-WEAR BAND RETENTION

- Magnetically retained bands are not subject to wear as are mechanically retained systems
- Immediate band engagement and release results in less drag on piston for lower breakaway force during initial carrier movement

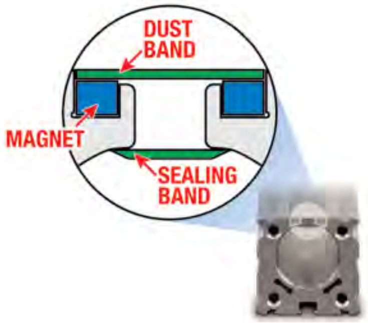

RETAINED DUST BAND

- Retained dust band keeps contaminants from entering the cylinder interior, protecting components for reduced maintenance and increased uptime

DUST WIPER

Formed end cap and side dust wipers keep contaminants from entering the cylinder's internal area

ISOLATED PISTON

- Unique design isolates the piston from the applied load, extending the service life of the piston seals
- Piston remains isolated even when the carrier is deflected under load
- Piston bracket and carrier feature single piece extrusions, reducing failure points

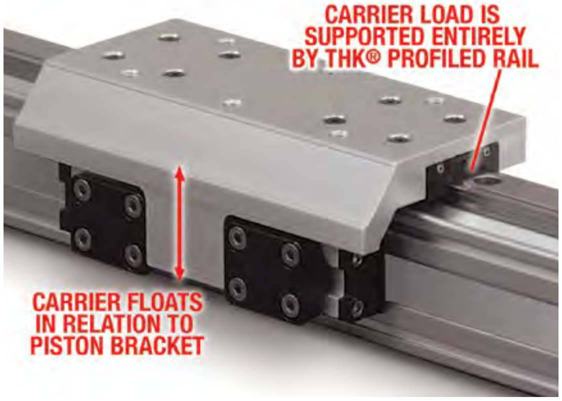

NOTE: Boxed letters indicate ordering codes

OPTIONS

AUXILIARY CARRIER $\boxed{D}\boxed{W}$

- 2X higher Fz (load) capacity
- High bending moment capacity

TUBE CLAMPS $\boxed{T}\boxed{C}$

- Used for intermediate support
- Flush with bottom of actuator to retain low profile
- Drop-in, adjustable mounting locations

FOOT MOUNTS $\boxed{F}\boxed{M}$

- For end mounting of MXP band cylinder
- Use to bottom or side mount actuator

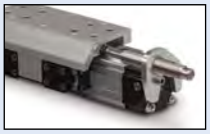

SHOCK ABSORBERS $\boxed{A}\boxed{L}$ $\boxed{S}\boxed{L}$ $\boxed{A}\boxed{H}$ $\boxed{S}\boxed{H}$

- Allows increased operating speed and load
- Self-compensates for load or speed changes
- Minimizes impact load to equipment
- Fixed or adjustable position shocks

SINGLE-END PORTING $\boxed{S}$

- Convenient single-end air connection (not available on MXP16)

SWITCHES

- Wide variety of sensing choices: Reed, Solid State PNP or NPN, all available normally open or normally closed
- Flush mount, drop-in installation, anytime
- Bright LEDs, power & signal indication
- CE rated, RoHS compliant

MOMENT AND LOAD CAPACITY

STANDARD

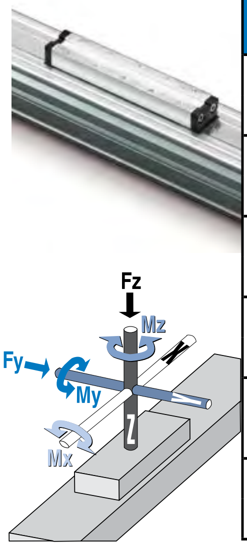

BORE			MAXIMUM BENDING MOMENTS Mx	My	Mz	MAX. LOAD Fz	THRUST (at 100 PSI)
16	Inch	0.63 in	3 in-lbs	35 in-lbs	5 in-lbs	30 lbf	30.7 lbf
	Metric	*16 mm*	*0.3 N-m*	*4.0 N-m*	*0.6 N-m*	*133 N*	*136 N*
25	Inch	1.00 in	9 in-lbs	132 in-lbs	27 in-lbs	65 lbf	78.5 lbf
	Metric	*25 mm*	*1.0 N-m*	*14.9 N-m*	*3.1 N-m*	*289 N*	*349 N*
32	Inch	1.25 in	36 in-lbs	318 in-lbs	120 in-lbs	115 lbf	123 lbf
	Metric	*32 mm*	*4.1 N-m*	*35.9 N-m*	*13.6 N-m*	*512 N*	*546 N*
40	Inch	1.50 in	55 in-lbs	575 in-lbs	156 in-lbs	195 lbf	177 lbf
	Metric	*38 mm*	*6.2 N-m*	*65 N-m*	*17.6 N-m*	*867 N*	*786 N*
50	Inch	2.00 in	98 in-lbs	1,017 in-lbs	172 in-lbs	270 lbf	314 lbf
	Metric	*50 mm*	*11.1 N-m*	*115 N-m*	*19.4 N-m*	*1,201 N*	*1,397 N*
63	Inch	2.50 in	120 in-lbs	1,776 in-lbs	216 in-lbs	370 lbf	491 lbf
	Metric	*64 mm*	*13.6 N-m*	*201 N-m*	*24.4 N-m*	*1,646 N*	*2,184 N*

The moment and load capacity of the actuator's bearing system is based on an L10 life of 200,000,000 linear inches of travel. Life of the actuator will vary for each application depending on the combined loads, motion parameters and operating conditions. The load factor (L_F) ratios for each application must not exceed a value of 1 (as calculated below). Exceeding a load factor of 1 will diminish the actuator's rated life.

$$L_F = \frac{Mx}{Mx_{max}} + \frac{My}{My_{max}} + \frac{Mz}{Mz_{max}} + \frac{Fy}{Fy_{max}} + \frac{Fz}{Fz_{max}} \leq 1$$

With combined loads, L_F must not exceed the value 1.

⚠ *Ratings are the maximum values for shock-free, vibration-free operation in a typical industrial environment.*
Contact Tolomatic for assistance in selecting the most appropriate actuator for your application.

MOMENT AND LOAD CAPACITY

DW AUXILIARY CARRIER

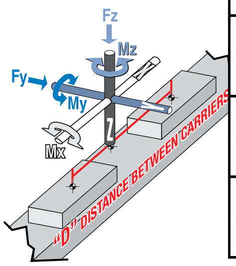

BORE			"D" MIN	MAXIMUM BENDING MOMENTS MxA	MyA*	MzA*	MAX. LOAD FzA	THRUST (at 100 PSI)
16	Inch	0.63 in	5.0 in	3 in-lbs	150 in-lbs	81 in-lbs	60 lbf	30.7 lbf
	Metric	*16 mm*	*127 mm*	*0.3 N-m*	*16.9 N-m*	*9.1 N-m*	*267 N*	*136 N*
25	Inch	1.00 in	6.0 in	9 in-lbs	390 in-lbs	143 in-lbs	130 lbf	78.5 lbf
	Metric	*25 mm*	*152 mm*	*1.0 N-m*	*44.1 N-m*	*16.2 N-m*	*578 N*	*349 N*
32	Inch	1.25 in	7.0 in	36 in-lbs	805 in-lbs	302 in-lbs	230 lbf	123 lbf
	Metric	*32 mm*	*178 mm*	*4.1 N-m*	*91.0 N-m*	*34.1 N-m*	*1,023 N*	*546 N*
40	Inch	1.50 in	8.5 in	55 in-lbs	1,658 in-lbs	413 in-lbs	390 lbf	177 lbf
	Metric	*38 mm*	*216 mm*	*6.2 N-m*	*187 N-m*	*46.7 N-m*	*1,735 N*	*786 N*
50	Inch	2.00 in	8.6 in	98 in-lbs	2,322 in-lbs	707 in-lbs	540 lbf	314 lbf
	Metric	*50 mm*	*218 mm*	*11.1 N-m*	*262 N-m*	*79.8 N-m*	*2,402 N*	*1,397 N*
63	Inch	2.50 in	13.0 in	120 in-lbs	4,810 in-lbs	808 in-lbs	740 lbf	491 lbf
	Metric	*64 mm*	*330 mm*	*13.6 N-m*	*544 N-m*	*91.0 N-m*	*3,292 N*	*2,184 N*

*At minimum "D" distance between carriers see graph below for other distances

With combined loads, L_F must not exceed the value 1.

$$L_F = \frac{Mx}{Mx_{max}} + \frac{My}{My_{max}} + \frac{Mz}{Mz_{max}} + \frac{Fy}{Fy_{max}} + \frac{Fz}{Fz_{max}} \leq 1$$

⚠ *Ratings are the maximum values for shock-free, vibration-free operation in a typical industrial environment.*
Contact Tolomatic for assistance in selecting the most appropriate actuator for your application.

Mya & Mza vs. DISTANCE

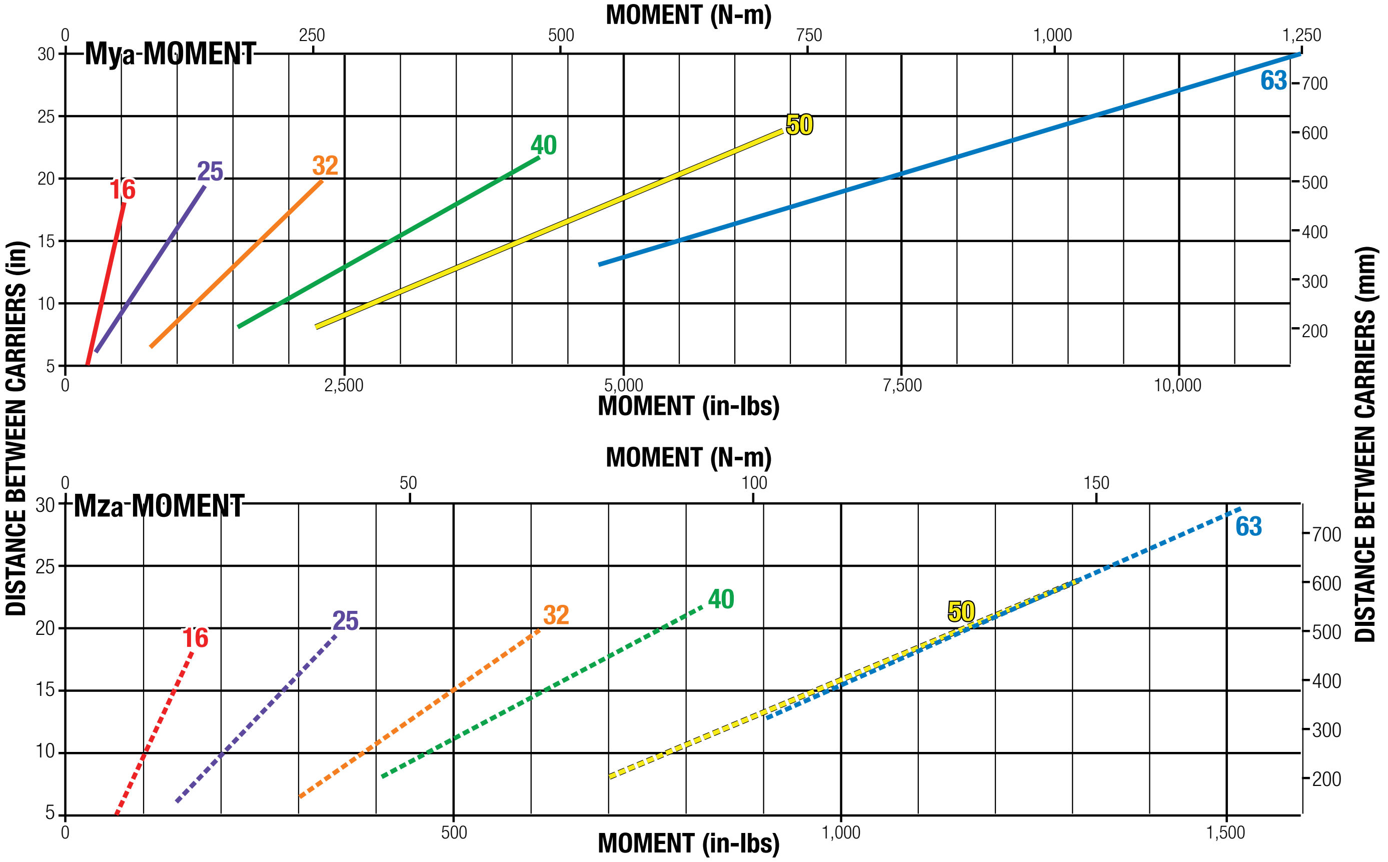

Ratings were calculated with the following conditions:

1.) Coupling between carriers is rigid.
2.) Load is equally distributed between carriers.
3.) Coupling device applies no misaligned loads to carriers.

MOMENT AND LOAD CAPACITY

ABT
MXP
BC2
BC3
BC4
LS
MG
CC
PB
ENGR

STANDARD

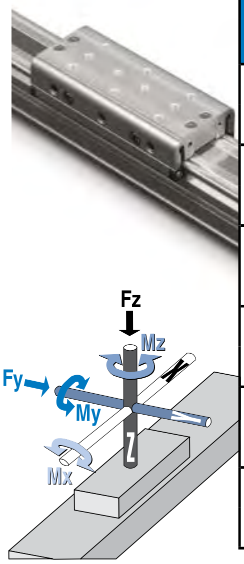

BORE			MAXIMUM BENDING MOMENTS			MAX. LOAD	THRUST
			Mx	My	Mz	Fz	(at 100 PSI)
16	Inch	0.63 in	22 in-lbs	19 in-lbs	25 in-lbs	35 lbf	30.7 lbf
	Metric	*16 mm*	*2.5 N-m*	*2.1 N-m*	*2.8 N-m*	*156 N*	*136 N*
25	Inch	1.00 in	60 in-lbs	110 in-lbs	34 in-lbs	70 lbf	78.5 lbf
	Metric	*25 mm*	*6.8 N-m*	*12.4 N-m*	*3.8 N-m*	*311 N*	*349 N*
32	Inch	1.25 in	100 in-lbs	350 in-lbs	140 in-lbs	150 lbf	123 lbf
	Metric	*32 mm*	*11.3 N-m*	*39.5 N-m*	*15.8 N-m*	*667 N*	*546 N*
40	Inch	1.50 in	275 in-lbs	600 in-lbs	220 in-lbs	225 lbf	177 lbf
	Metric	*38 mm*	*31.1 N-m*	*67.8 N-m*	*24.9 N-m*	*1,001 N*	*786 N*
50	Inch	2.00 in	315 in-lbs	1,155 in-lbs	341 in-lbs	315 lbf	314 lbf
	Metric	*50 mm*	*35.6 N-m*	*131 N-m*	*38.5 N-m*	*1,401 N*	*1,397 N*
63	Inch	2.50 in	585 in-lbs	2,340 in-lbs	520 in-lbs	520 lbf	491 lbf
	Metric	*64 mm*	*66.1 N-m*	*264 N-m*	*58.8 N-m*	*2,313 N*	*2,184 N*

The moment and load capacity of the actuator's bearing system is based on an L10 life of 200,000,000 linear inches of travel. Life of the actuator will vary for each application depending on the combined loads, motion parameters and operating conditions. The load factor (L_F) ratios for each application must not exceed a value of 1 (as calculated below). Exceeding a load factor of 1 will diminish the actuator's rated life.

$$L_F = \frac{Mx}{Mx_{max}} + \frac{My}{My_{max}} + \frac{Mz}{Mz_{max}} + \frac{Fy}{Fy_{max}} + \frac{Fz}{Fz_{max}} \leq 1$$

With combined loads, L_F must not exceed the value 1.

⚠ *Ratings are the maximum values for shock-free, vibration-free operation in a typical industrial environment.*
Contact Tolomatic for assistance in selecting the most appropriate actuator for your application.

DW AUXILIARY CARRIER

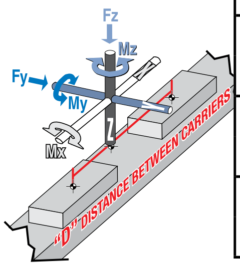

BORE			"D" MIN	MAXIMUM BENDING MOMENTS* MxA	MyA	MzA	MAX. LOAD FzA	THRUST (at 100 PSI)
16	Inch	0.63 in	5.0 in	44 in-lbs	175 in-lbs	175 in-lbs	70 lbf	30.7 lbf
	Metric	*16 mm*	*127 mm*	*5.0 N-m*	*19.8 N-m*	*19.8 N-m*	*311 N*	*136 N*
25	Inch	1.00 in	6.0 in	120 in-lbs	420 in-lbs	420 in-lbs	140 lbf	78.5 lbf
	Metric	*25 mm*	*152 mm*	*13.6 N-m*	*47.5 N-m*	*47.5 N-m*	*623 N*	*349 N*
32	Inch	1.25 in	7.0 in	200 in-lbs	1,050 in-lbs	1,050 in-lbs	300 lbf	123 lbf
	Metric	*32 mm*	*178 mm*	*22.6 N-m*	*119 N-m*	*119 N-m*	*1,334 N*	*546 N*
40	Inch	1.50 in	8.5 in	550 in-lbs	1,913 in-lbs	1,913 in-lbs	450 lbf	177 lbf
	Metric	*38 mm*	*216 mm*	*62.1 N-m*	*216 N-m*	*216 N-m*	*2,002 N*	*786 N*
50	Inch	2.00 in	8.6 in	630 in-lbs	2,709 in-lbs	2,709 in-lbs	630 lbf	314 lbf
	Metric	*50 mm*	*218 mm*	*71.2 N-m*	*306 N-m*	*306 N-m*	*2,802 N*	*1,397 N*
63	Inch	2.50 in	13.0 in	1,170 in-lbs	6,760 in-lbs	6,760 in-lbs	1,040 lbf	491 lbf
	Metric	*64 mm*	*330 mm*	*132 N-m*	*764 N-m*	*764 N-m*	*4,626 N*	*2,184 N*

*At minimum “D” distance between carriers see graph below for other distances

With combined loads, L_F must not exceed the value 1.

$$L_F = \frac{Mx}{Mx_{max}} + \frac{My}{My_{max}} + \frac{Mz}{Mz_{max}} + \frac{Fy}{Fy_{max}} + \frac{Fz}{Fz_{max}} \leq 1$$

Ratings are the maximum values for shock-free, vibration-free operation in a typical industrial environment.
Contact Tolomatic for assistance in selecting the most appropriate actuator for your application.

Mya & Mza vs. DISTANCE

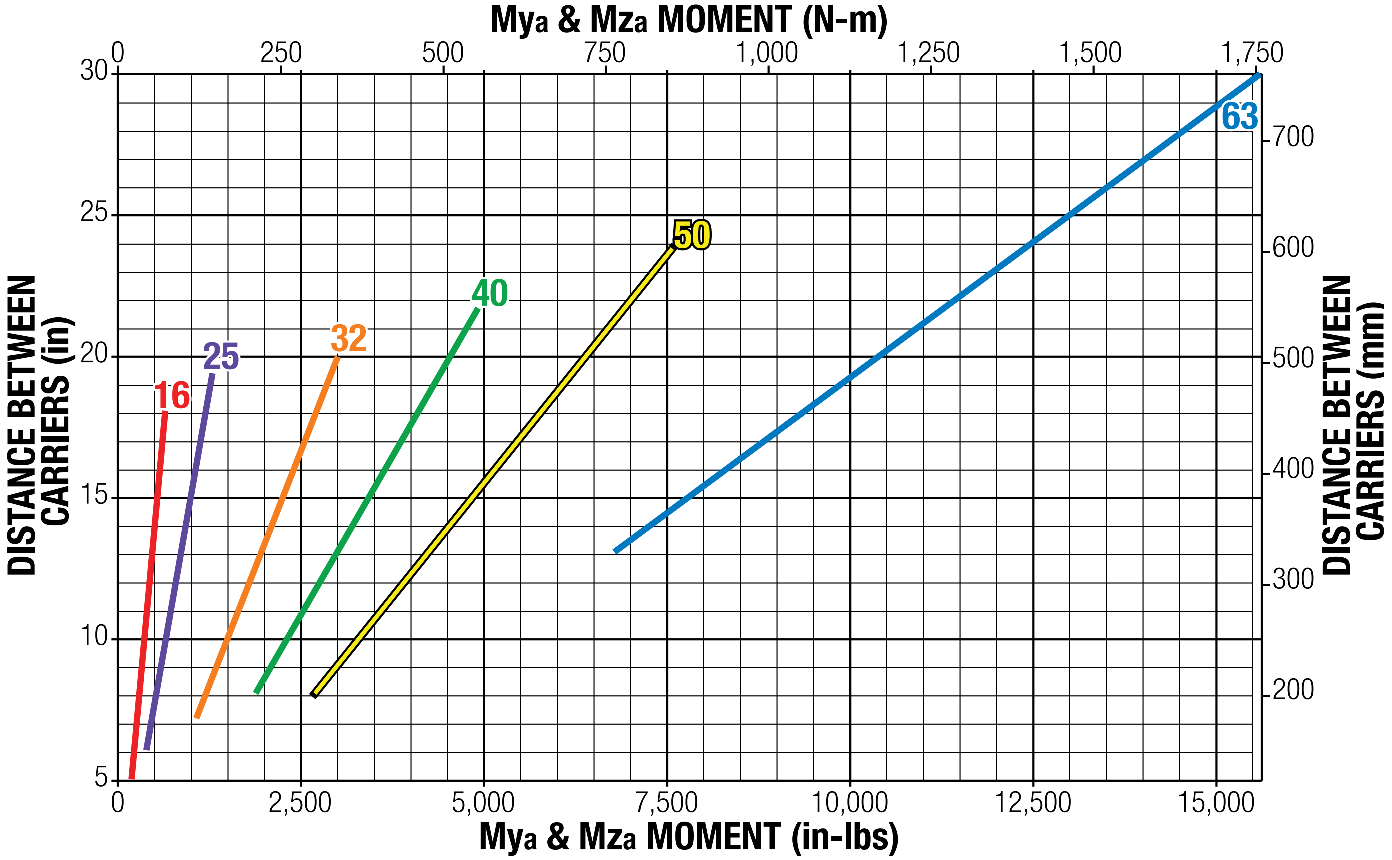

Ratings were calculated with the following conditions:

1.) Coupling between carriers is rigid.
2.) Load is equally distributed between carriers.
3.) Coupling device applies no misaligned loads to carriers.

MOMENT AND LOAD CAPACITY

STANDARD

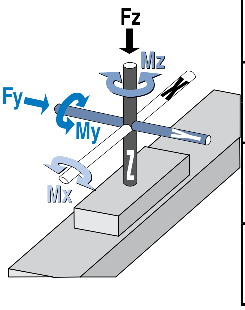

BORE			MAXIMUM BENDING MOMENTS			MAX. LOAD		THRUST
			Mx	My	Mz	Fy	Fz	(at 100 PSI)
16	Inch	0.63 in	39 in-lbs	339 in-lbs	339 in-lbs	217 lbf	217 lbf	30.7 lbf
	Metric	*16 mm*	*4.5 N-m*	*38.3 N-m*	*38.3 N-m*	*966 N*	*966 N*	*136 N*
25	Inch	1.00 in	126 in-lbs	502 in-lbs	377 in-lbs	449 lbf	449 lbf	78.5 lbf
	Metric	*25 mm*	*14.3 N-m*	*56.7 N-m*	*42.6 N-m*	*1,996 N*	*1,996 N*	*349 N*
32	Inch	1.25 in	226 in-lbs	1,344 in-lbs	1,344 in-lbs	569 lbf	569 lbf	123 lbf
	Metric	*32 mm*	*25.6 N-m*	*152 N-m*	*152 N-m*	*2,531 N*	*2,531 N*	*546 N*
40	Inch	1.50 in	600 in-lbs	1,913 in-lbs	1,913 in-lbs	736 lbf	736 lbf	177 lbf
	Metric	*38 mm*	*67.8 N-m*	*216 N-m*	*216 N-m*	*3,274 N*	*3,274 N*	*786 N*
50	Inch	2.00 in	811 in-lbs	3,483 in-lbs	3,483 in-lbs	1,014 lbf	1,014 lbf	314 lbf
	Metric	*50 mm*	*91.7 N-m*	*394 N-m*	*394 N-m*	*4,510 N*	*4,510 N*	*1,397 N*
63	Inch	2.50 in	1,019 in-lbs	5,339 in-lbs	5,339 in-lbs	1,292 lbf	1,292 lbf	491 lbf
	Metric	*64 mm*	*115 N-m*	*603 N-m*	*603 N-m*	*5,745 N*	*5,745 N*	*2,184 N*

⚠ *NOTE: Mating surface of component mounted to carrier must maintain a flatness of at least 0.0015" (0.040 mm)*

⚠ *Ratings are the maximum values for shock-free, vibration-free operation in a typical industrial environment.*
Contact Tolomatic for assistance in selecting the most appropriate actuator for your application.

ACTUATOR SIZING

Use sizing software or call Tolomatic (1-800-328-2174) with application information. We will provide any assistance needed to determine the proper MXP band cylinder.

The moment and load capacity of the actuator's bearing system is based on an L10 life of 200,000,000 linear inches of travel. Life of the actuator will vary for each application depending on the combined loads, motion parameters and operating conditions. The load factor (L_F) ratios for each application must not exceed a value of 1 (as calculated below). Exceeding a load factor of 1 will diminish the actuator's rated life.

$$L_F = \frac{Mx}{Mx_{max}} + \frac{My}{My_{max}} + \frac{Mz}{Mz_{max}} + \frac{Fy}{Fy_{max}} + \frac{Fz}{Fz_{max}} \leq 1$$

With combined loads, L_F must not exceed the value 1.

SPEED FACTOR

FOR APPLICATIONS WITH HIGH SPEED OR SIGNIFICANT SHOCK AND VIBRATION: Calculated values of loads and bending moments must be increased by speed factor from the graph at right to obtain full rated life of profiled rail bearing system.

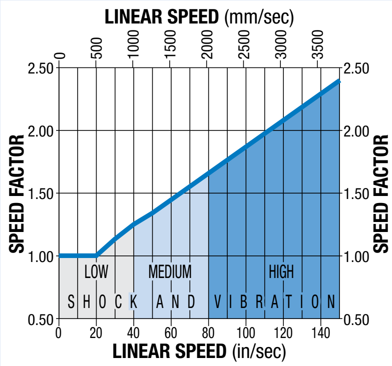

PROFILED RAIL LUBRICATION

Proper lubrication of profiled rail bearing system is essential for normal operation and achievement of full rated life of MX--P actuators. Lubrication should be performed at intervals of 4,000,000 inches of travel or once every year, whichever occurs first. **However, operating conditions such as high speed or significant shock and vibration may require more frequent lubrication.** Please consult Tolomatic for recommendations.

Recommended grease types:

1. Refined mineral oil-based multi-purpose grease with lithium thickening agent.
2. High-grade synthetic oil-based grease with urea thickening agent.

MOMENT AND LOAD CAPACITY

DW AUXILIARY CARRIER

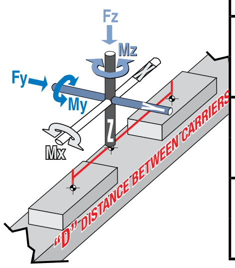

BORE			"D" MIN	MAXIMUM BENDING MOMENTS* MxA	MyA	MzA	MAX. LOAD FzA	FyA	THRUST (at 100 PSI)
16	Inch	0.63 in	5.0 in	79 in-lbs	620 in-lbs	620 in-lbs	434 lbf	434 lbf	30.7 lbf
	Metric	*16 mm*	*127 mm*	*8.9 N-m*	*70.1 N-m*	*70.1 N-m*	*1,932 N*	*1,932 N*	*136 N*
25	Inch	1.00 in	6.0 in	252 in-lbs	1,610 in-lbs	1,610 in-lbs	898 lbf	898 lbf	78.5 lbf
	Metric	*25 mm*	*152 mm*	*28.5 N-m*	*182 N-m*	*182 N-m*	*3,993 N*	*3,993 N*	*349 N*
32	Inch	1.25 in	7.0 in	453 in-lbs	2,202 in-lbs	2,202 in-lbs	1,138 lbf	1,138 lbf	123 lbf
	Metric	*32 mm*	*178 mm*	*51.1 N-m*	*249 N-m*	*249 N-m*	*5,063 N*	*5,063 N*	*546 N*
40	Inch	1.50 in	8.5 in	1,208 in-lbs	3,601 in-lbs	3,601 in-lbs	1,472 lbf	1,472 lbf	177 lbf
	Metric	*38 mm*	*216 mm*	*137 N-m*	*407 N-m*	*407 N-m*	*6,549 N*	*6,549 N*	*786 N*
50	Inch	2.00 in	8.6 in	1,623 in-lbs	4,966 in-lbs	4,966 in-lbs	2,028 lbf	2,028 lbf	314 lbf
	Metric	*50 mm*	*218 mm*	*183 N-m*	*561 N-m*	*561 N-m*	*9,020 N*	*9,020 N*	*1,397 N*
63	Inch	2.50 in	13.0 in	2,038 in-lbs	9,508 in-lbs	9,508 in-lbs	2,583 lbf	2,583 lbf	491 lbf
	Metric	*64 mm*	*330 mm*	*230 N-m*	*1,074 N-m*	*1,074 N-m*	*11,490 N*	*11,490 N*	*2,184 N*

*At minimum "D" distance between carriers see graph below for other distances

With combined loads, L_F must not exceed the value 1.

$$L_F = \frac{Mx}{Mx_{max}} + \frac{My}{My_{max}} + \frac{Mz}{Mz_{max}} + \frac{Fy}{Fy_{max}} + \frac{Fz}{Fz_{max}} \leq 1$$

Ratings are the maximum values for shock-free, vibration-free operation in a typical industrial environment.
Contact Tolomatic for assistance in selecting the most appropriate actuator for your application.

NOTE: Mating surface of component mounted to carrier must maintain a flatness of at least 0.0015" (0.040 mm)

Mya & Mza vs. DISTANCE

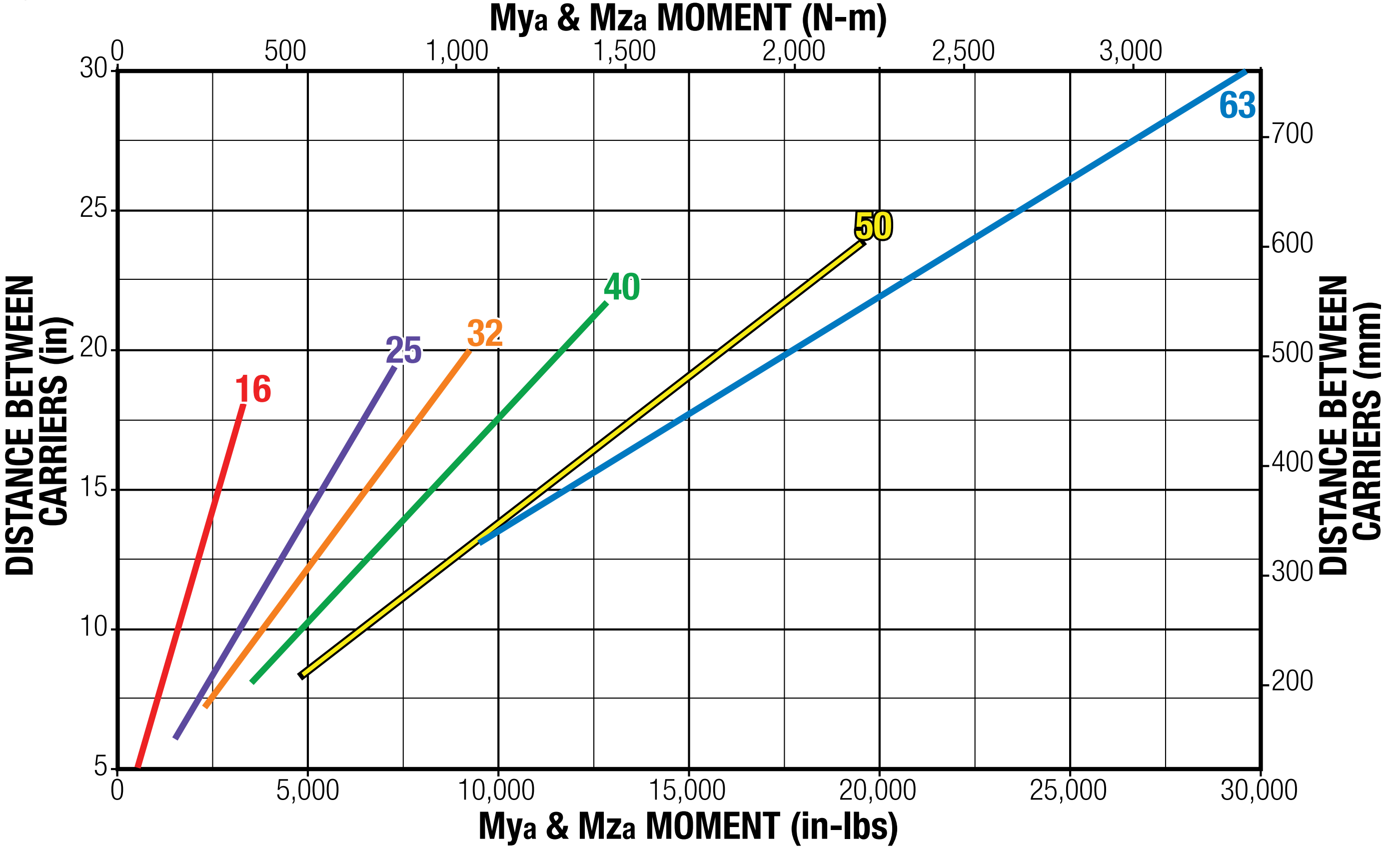

Ratings were calculated with the following conditions:

1.) Coupling between carriers is rigid.
2.) Load is equally distributed between carriers.
3.) Coupling device applies no misaligned loads to carriers.

LOAD DEFLECTION

DEFLECTION ABOUT X AXIS

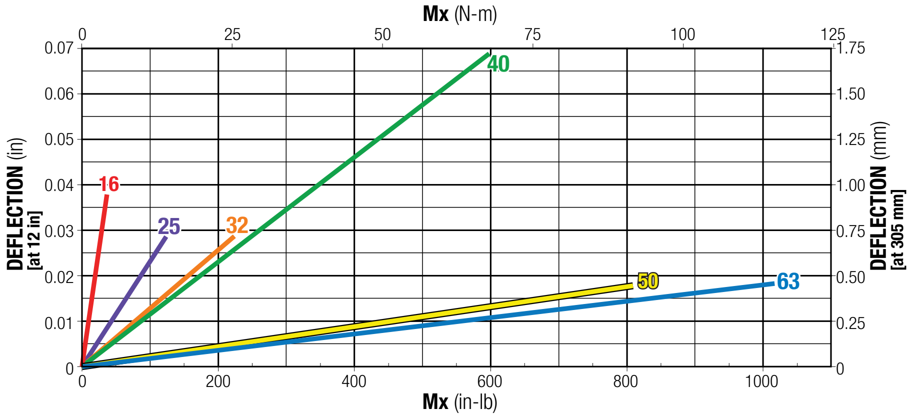

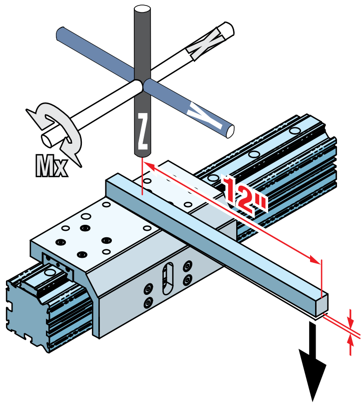

DEFLECTION ABOUT Y AXIS

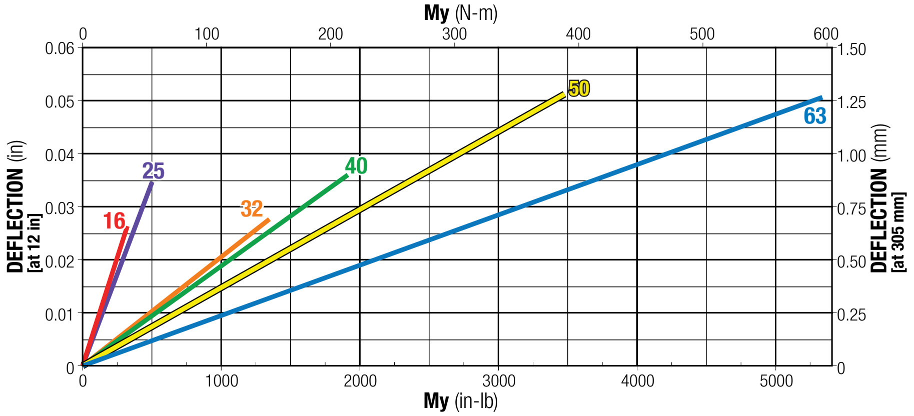

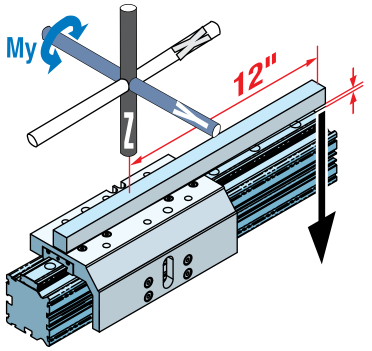

DEFLECTION ABOUT Z AXIS

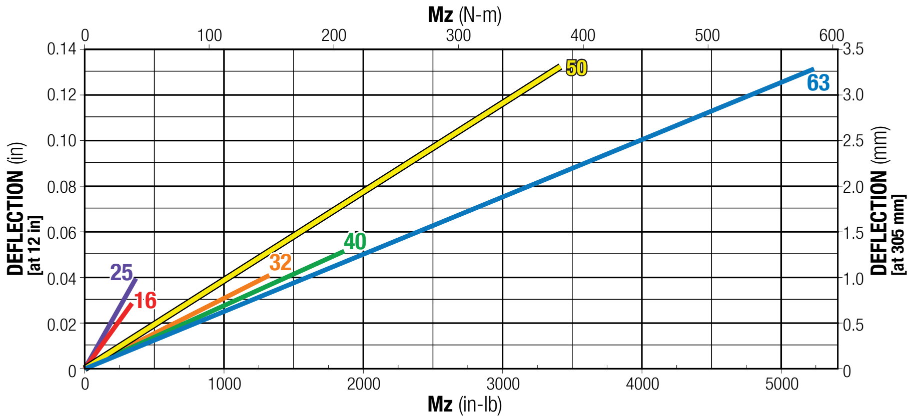

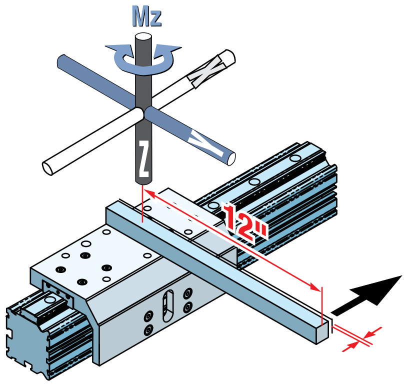

DEFLECTION TESTING WAS DONE UNDER THESE CRITERIA:

1.) Actuator was properly mounted with distance between mounting plates within recommendations (see Tube Clamp Requirements page MXP_24)

2.) Deflection was measured at 12" from center of carrier as shown

SPECIFICATIONS

		SIZE	16	25	32	40	50	63
ACTUAL BORE SIZE		in	0.63	1.00	1.25	1.50	2.00	2.50
		mm	*16*	*25*	*32*	*38*	*50*	*64*
BASE WEIGHT	**N INTERNAL BEARING**	lb	0.73	1.70	3.58	5.57	11.07	22.59
		kg	*0.33*	*0.77*	*1.62*	*2.53*	*5.02*	*10.25*
	S SOLID BEARING	lb	1.07	2.30	4.68	7.64	14.03	30.78
		kg	*0.48*	*1.04*	*2.12*	*3.47*	*6.36*	*13.96*
	P PROFILED RAIL	lb	1.25	2.94	5.89	9.91	17.22	31.64
		kg	*0.57*	*1.33*	*2.67*	*4.5*	*7.81*	*14.35*
WEIGHT PER UNIT OF STROKE	**N INTERNAL & S SOLID**	lb/in	0.082	0.134	0.233	0.306	0.513	0.879
		kg/mm	*0.0015*	*0.0024*	*0.0042*	*0.0055*	*0.0092*	*0.0157*
	P PROFILED RAIL	lb/in	0.102	0.192	0.316	0.491	0.701	1.153
		kg/mm	*0.0018*	*0.0034*	*0.0056*	*0.0088*	*0.0125*	*0.0206*
MAXIMUM STROKE LENGTH		in	206	206	205	203	203	103
		mm	*5232*	*5232*	*5207*	*5156*	*5156*	*2616*
AUXILIARY CARRIER; MIN. "D" BETWEEN CARRIERS		in	5.00	6.00	7.00	8.50	8.60	13.00
		mm	*127.0*	*152.4*	*177.8*	*215.9*	*218.4*	*330.2*
MAXIMUM OPERATING PRESSURE		PSI	100					
		bar	*6.9*					
TEMPERATURE RANGE		°F	20 to 140					
		°C	*-7 to 60*					

TIPS FOR MAXIMIZING BAND CYLINDER LIFE

TO GET THE MOST LIFE OUT OF YOUR MXP BAND CYLINDER FOLLOW THESE SIMPLE GUIDELINES WHEN SIZING A BAND CYLINDER FOR AN APPLICATION.

Four factors that affect the life of a band cylinder are Load, Speed, Environment and Deceleration. The following tips will help you select the appropriate band cylinder for a specific application's loads and speeds to maximize actuator life.

1 LOAD: KEEP THE LOAD FACTOR LESS THAN 1

Applications with multiple loads put additional stress on the band cylinder's bearing system. It is important to account for all these loads to make sure the bearing system is not over loaded. Both static and dynamic loads need to be addressed.

The formula below can be used to calculate the load factor:

$$L_F = \frac{Mx}{Mx_{max}} + \frac{My}{My_{max}} + \frac{Mz}{Mz_{max}} + \frac{Fy}{Fy_{max}} + \frac{Fz}{Fz_{max}} \leq 1$$

2 SPEED: REDUCE SPEEDS

High speeds and cycle rates stress the band cylinder's guidance system more than slower applications. Keeping speeds reduced will optimize the life of the actuator.

3 ENVIRONMENT: KEEP CONTAMINATION OFF BAND AND MOVING SURFACES

Contamination will decrease band cylinder service life. Service life can be improved by orienting the band and bearing system 180 degrees from the contamination source. For instance, if solid particulates are falling on the actuator, it is best to try to orient the band cylinder so that the band and bearing system are shielded from the particulates.

4 DECELERATION: DECELERATE WITH SHOCK ABSORBERS

Shock absorbers provide the most controlled and reliable deceleration at the end of stroke. Stopping in a controlled fashion will significantly decrease the inertia loads on the carrier bearings, extending cylinder life. The best location for shock absorbers is at the center of gravity of the load.

CUSHION & SHOCK ABSORBER PERFORMANCE

ABT
MXP
BC2
BC3
BC4
LS
MG
CC
PB
ENGR

MXP16 (ALL BEARINGS)

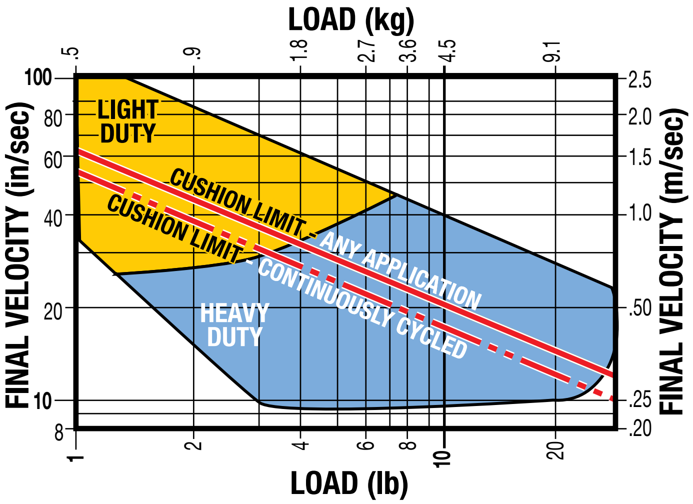

MXP25 (ALL BEARINGS)

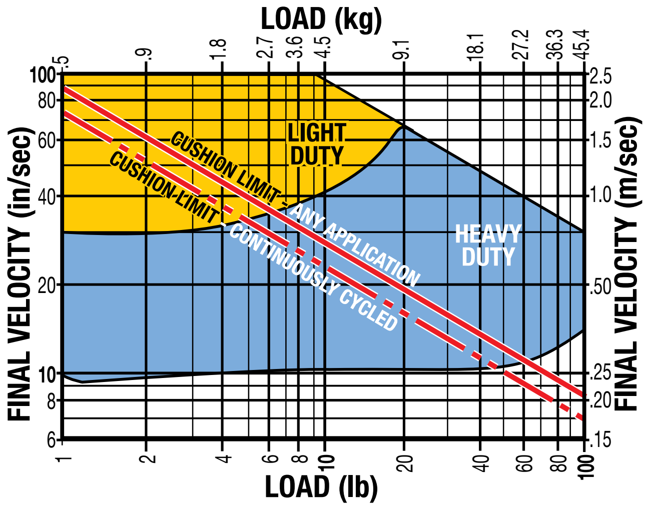

MXP32 (ALL BEARINGS)

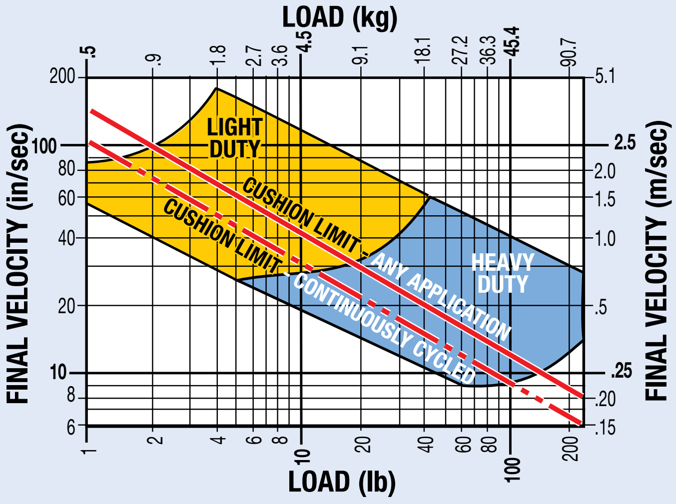

MXP40 (ALL BEARINGS)

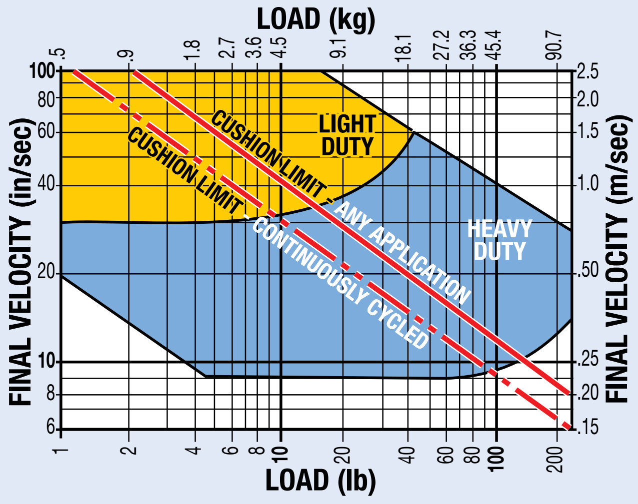

MXP50 (ALL BEARINGS)

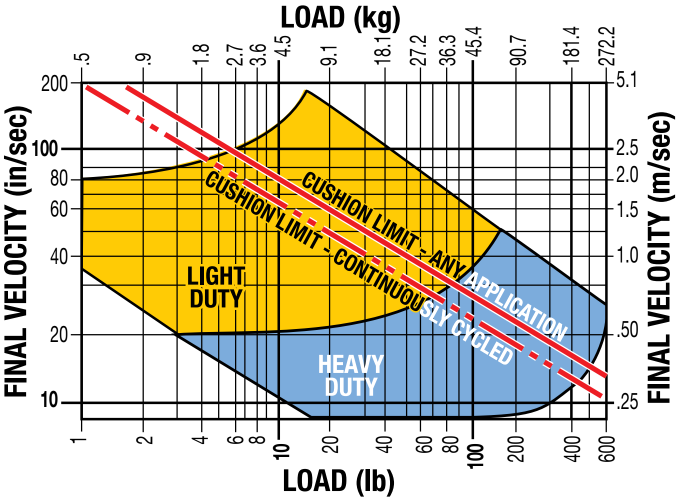

MXP63 (ALL BEARINGS)

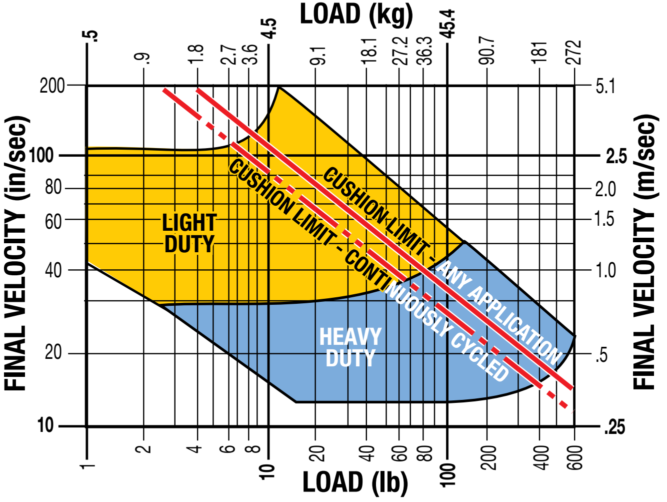

NOTE: If final (impact) velocity cannot be calculated directly, a reasonable guideline to use is 2X average velocity.

⚠ NOTE: When 2 shock absorbers are ordered, the MXP will be assembled with NO internal cushion seals.

TUBE CLAMP REQUIREMENTS

N - INTERNAL BEARING

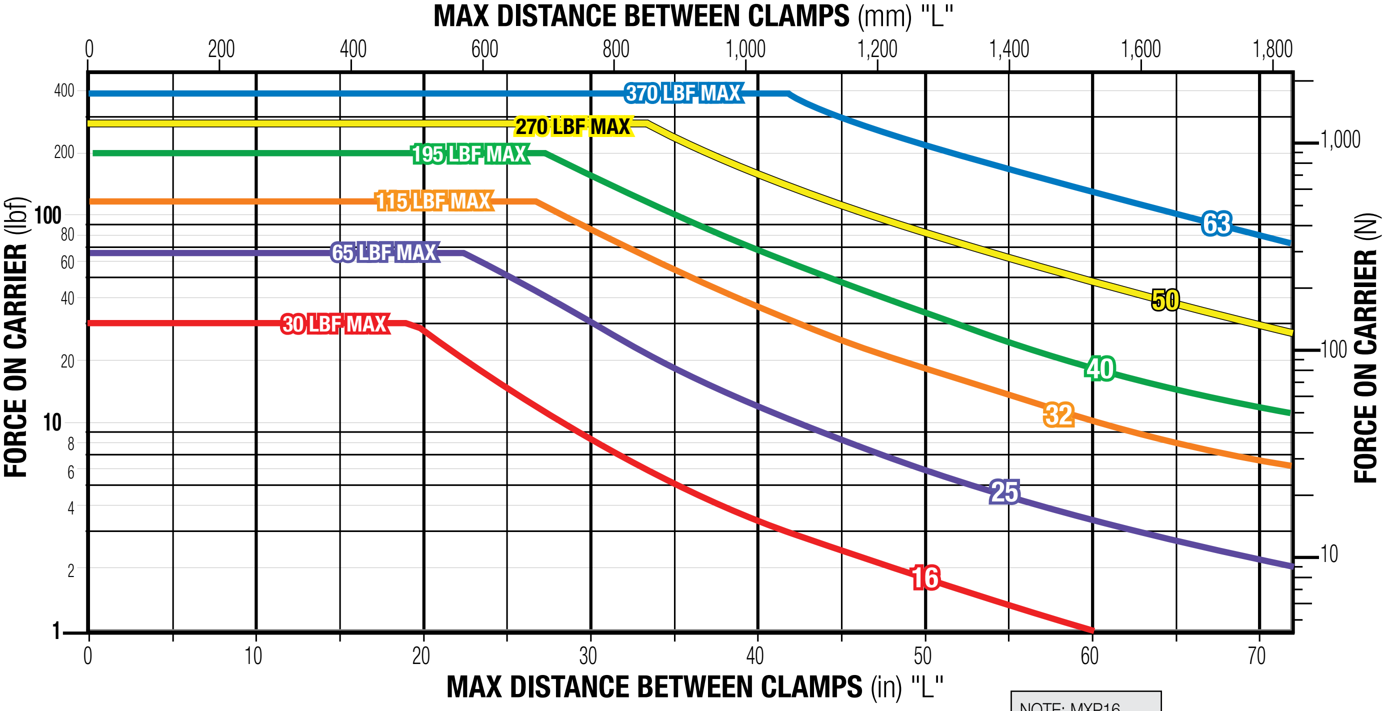

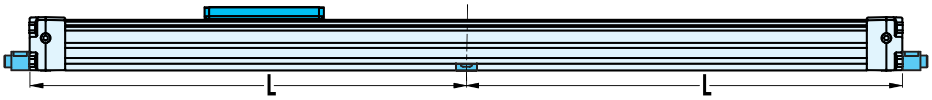

NOTE: MXP16 uses MP (mounting plate) with included T-nuts

S - SOLID BEARING

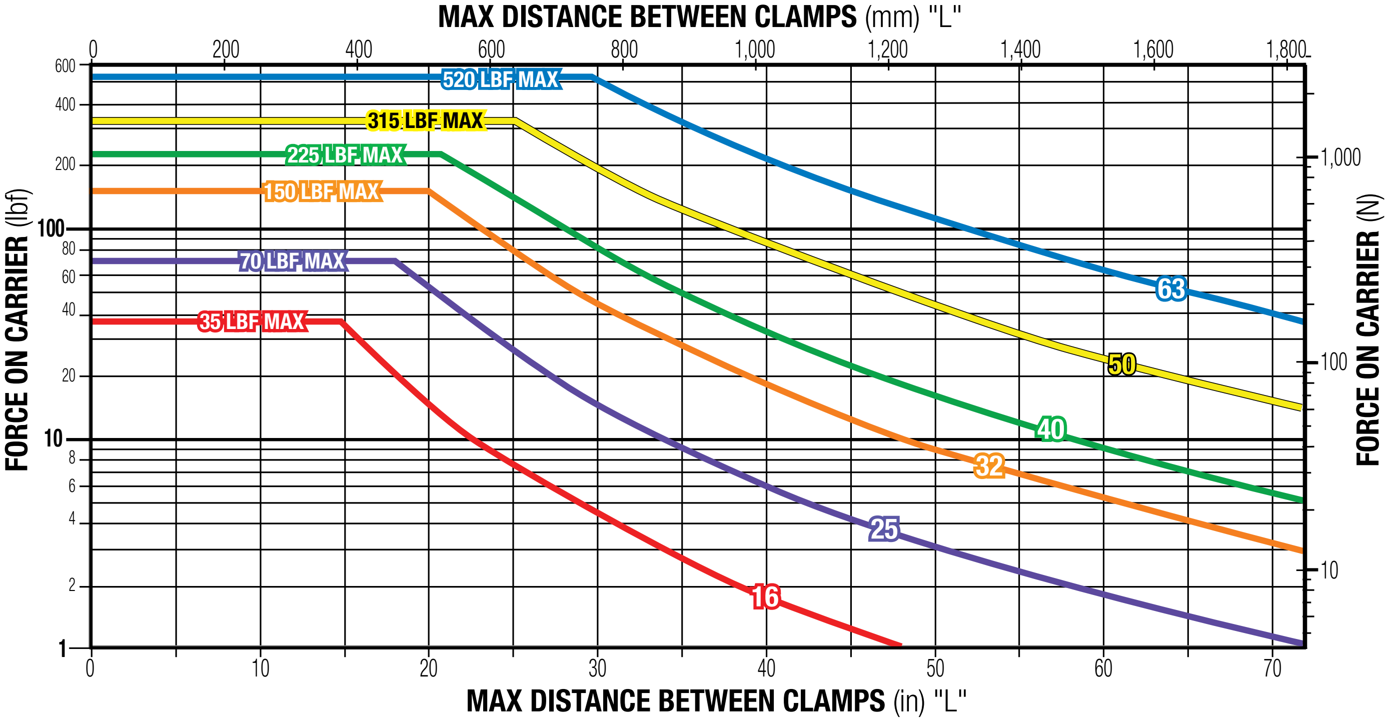

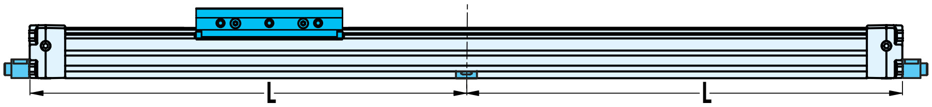

NOTE: MXP16 uses MP (mounting plate) with included T-nuts

TUBE CLAMP REQUIREMENTS

P - PROFILED RAIL

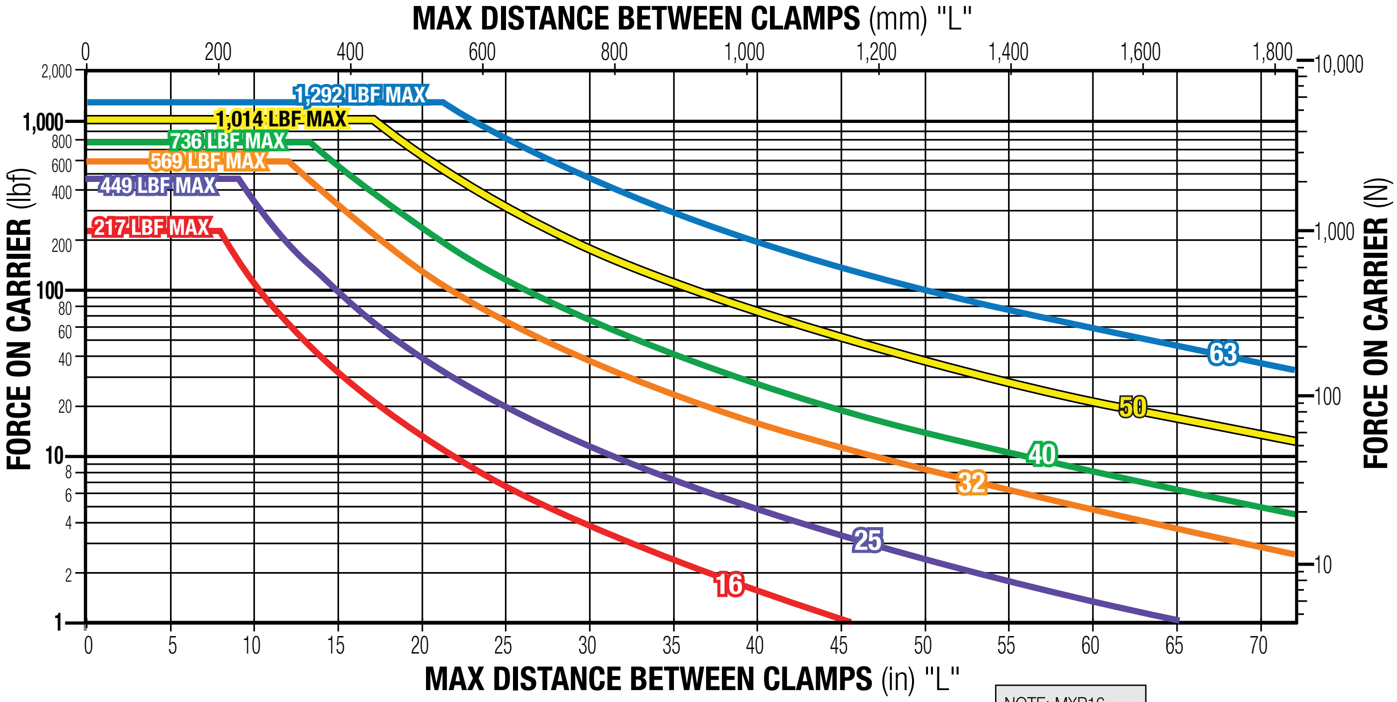

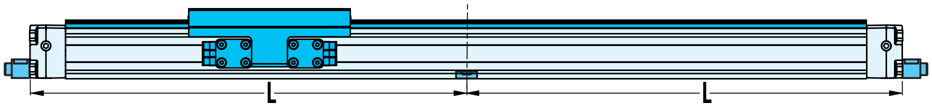

NOTE: MXP16
uses M P
(mounting plate)
with included T-nuts

N-INTERNAL BEARING ACTUATOR DIMENSIONS

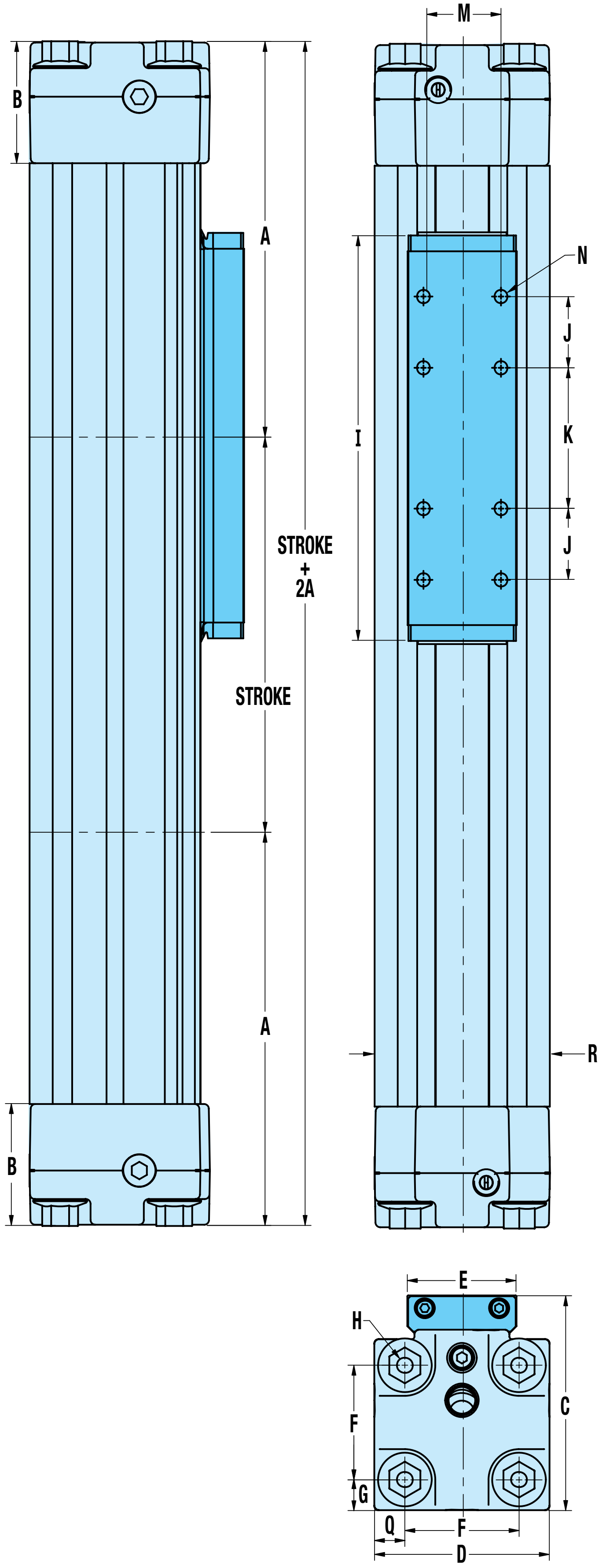

	MXP16	MXP25	MXP32	MXP40	MXP50	MXP63
A	3.13	3.94	4.90	5.82	6.29	8.45
mm	*79.6*	*100.2*	*124.5*	*147.7*	*159.8*	*214.5*
B	0.55	1.11	1.50	1.50	1.97	1.97
mm	*14.0*	*28.3*	*38.1*	*38.0*	*50.0*	*50.0*
C	1.55	2.07	2.67	2.98	3.86	4.76
mm	*39.3*	*52.6*	*67.8*	*75.8*	*98.1*	*120.8*
D	1.18	1.65	2.18	2.52	3.01	3.94
mm	*30.0*	*42.0*	*55.4*	*64.0*	*78.7*	*100.0*
E	0.83	0.83	1.36	1.61	2.13	2.44
mm	*21.0*	*21.0*	*34.5*	*41.0*	*54.0*	*62.0*
F	0.85	1.10	1.42	1.81	2.25	2.87
mm	*21.5*	*27.9*	*36.1*	*46.0*	*57.2*	*73.0*
G	0.17	0.25	0.38	0.35	0.43	0.53
mm	*4.3*	*6.3*	*9.7*	*9.0*	*10.8*	*13.5*
H	#8-32 (8)	#10-24 (8)	1/4-20 (8)	1/4-20 (8)	5/16-18 (8)	5/16-18 (8)
mm	*M4x0.7 (8)*	*M5x0.8 (8)*	*M6x1.0 (8)*	*M6x1.0 (8)*	*M8x1.25 (8)*	*M8x1.25 (8)*
I	3.78	4.45	5.04	5.87	6.57	9.69
mm	*96.0*	*113.0*	*128.0*	*149.0*	*166.8*	*246.0*
J	0.59	0.79	0.89	0.63	1.13	1.18
mm	*15.0*	*20.0*	*22.5*	*15.9*	*28.6*	*30.0*
K	1.18	1.57	1.75	3.00	2.25	4.33
mm	*30.0*	*40.0*	*44.5*	*76.2*	*57.2*	*110.0*
M	0.63	0.59	0.96	1.05	1.50	1.69
mm	*16.0*	*15.0*	*24.5*	*26.7*	*38.1*	*43.0*
N	#6-32 (8)	#8-32 (8)	#10-32 (8)	1/4-20 (8)	5/16-18 (8)	3/8-16 (8)
mm	*M3x0.5 (8)*	*M4x0.7 (8)*	*M5x0.8 (8)*	*M6x1.0 (8)*	*M8x1.25 (8)*	*M10x1.5 (8)*
Q	0.17	0.28	0.38	0.35	0.43	0.53
mm	*4.3*	*7.0*	*9.7*	*9.0*	*10.8*	*13.5*
R	1.18	1.65	2.18	2.52	3.10	3.94
mm	*30.00*	*42.00*	*55.37*	*64.00*	*78.74*	*100.00*

3D CAD available at www.tolomatic.com
Always use configurated CAD solid model
to determine critical dimensions

N-INTERNAL BEARING PORTING DIMENSIONS MXP16N, MXP25N, MXP32N

DUAL END PORTING

SINGLE-END PORTING

16mm BORE

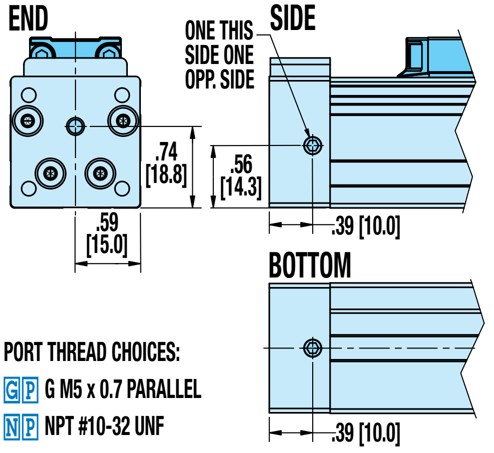

PORT THREAD CHOICES:

GP	G M5 x 0.7 PARALLEL
NP	NPT #10-32 UNF

Not Available for 16mm BORE

25mm BORE

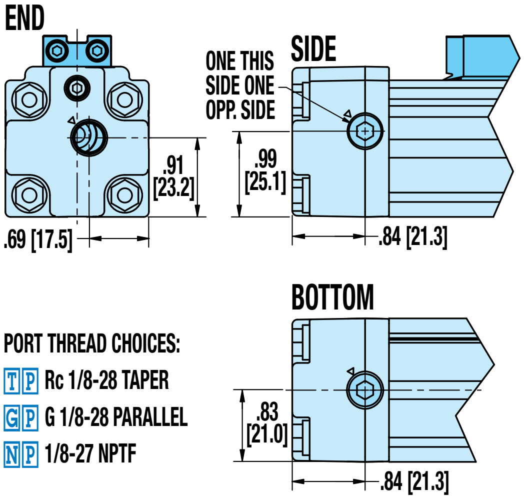

PORT THREAD CHOICES:

TP	Rc 1/8-28 TAPER
GP	G 1/8-28 PARALLEL
NP	1/8-27 NPTF

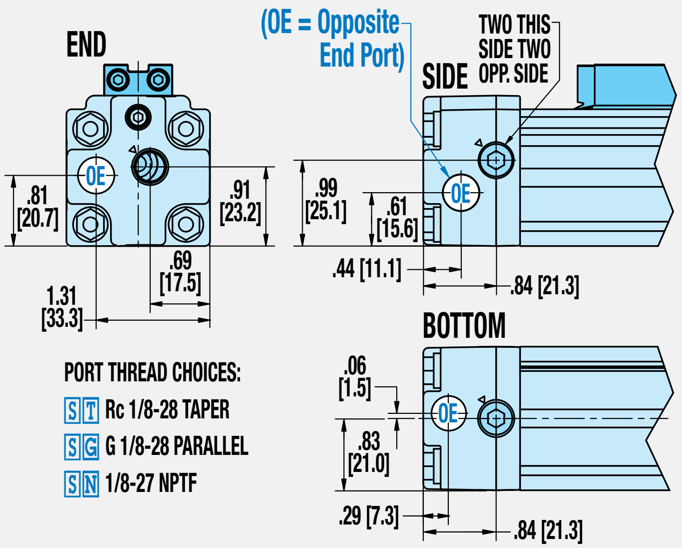

PORT THREAD CHOICES:

ST	Rc 1/8-28 TAPER
SG	G 1/8-28 PARALLEL
SN	1/8-27 NPTF

32mm BORE

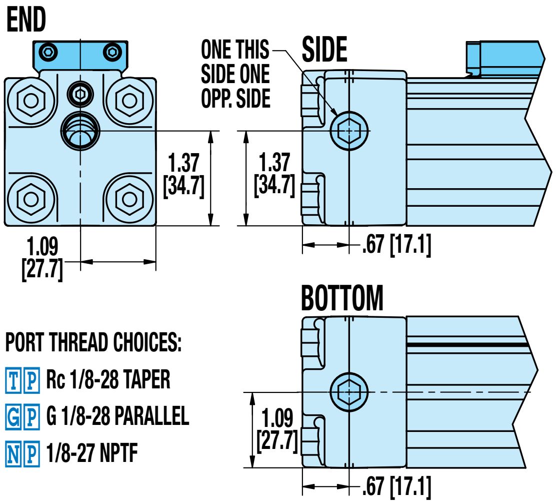

PORT THREAD CHOICES:

TP	Rc 1/8-28 TAPER
GP	G 1/8-28 PARALLEL
NP	1/8-27 NPTF

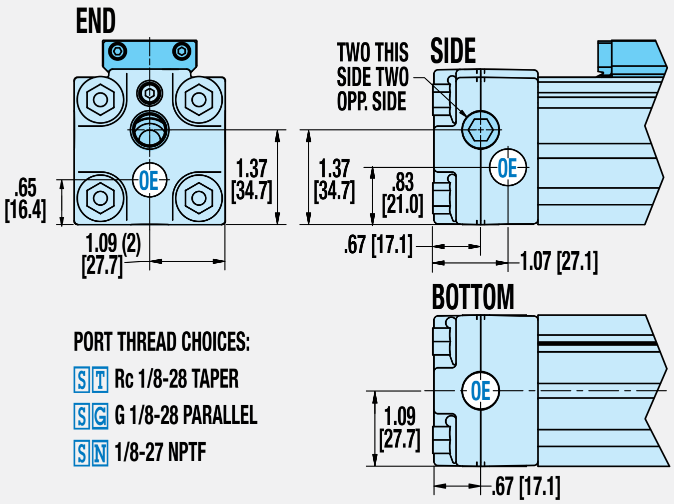

PORT THREAD CHOICES:

ST	Rc 1/8-28 TAPER
SG	G 1/8-28 PARALLEL
SN	1/8-27 NPTF

Dimensions in inches [brackets indicate dimensions in millimeters]

N-INTERNAL BEARING PORTING DIMENSIONS MXP40N, MXP50N, MXP63N

40mm BORE

DUAL END PORTING

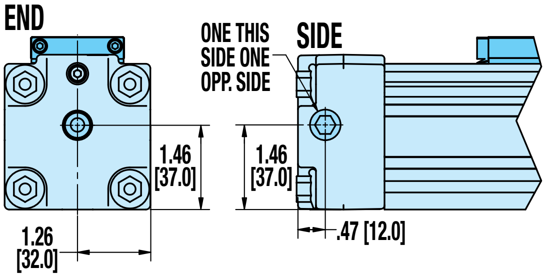

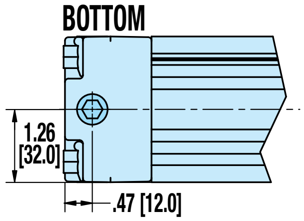

PORT THREAD CHOICES:

TP Rc 1/4-19 TAPER
GP G 1/4-19 PARALLEL
NP 1/4-18 NPTF

SINGLE-END PORTING

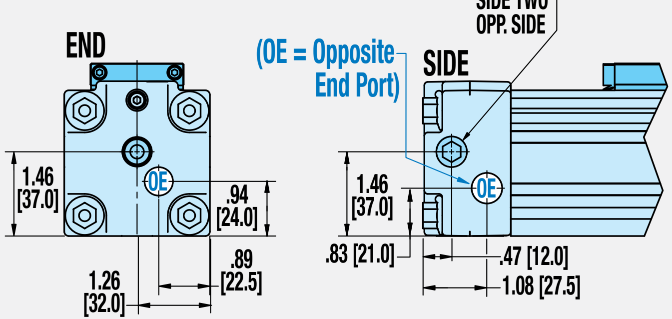

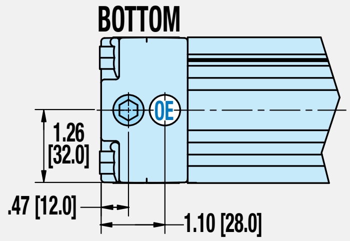

PORT THREAD CHOICES:

ST Rc 1/4-19 TAPER
SG G 1/4-19 PARALLEL
SN 1/4-18 NPTF

50mm BORE

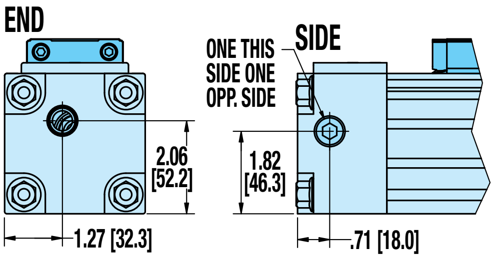

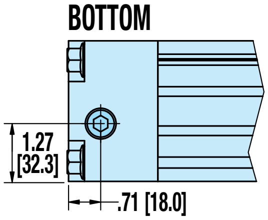

PORT THREAD CHOICES:

TP Rc 3/8-19 TAPER
GP G 3/8-19 PARALLEL
NP 3/8-18 NPTF

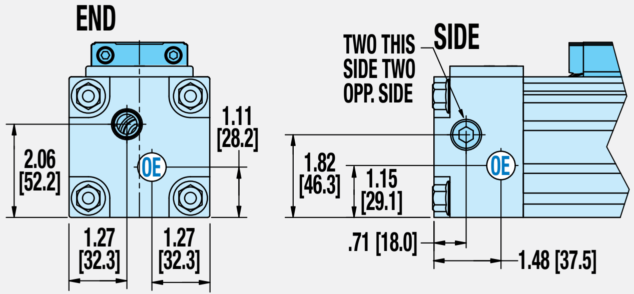

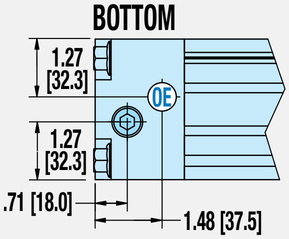

PORT THREAD CHOICES:

ST Rc 3/8-19 TAPER
SG G 3/8-19 PARALLEL
SN 3/8-18 NPTF

63mm BORE

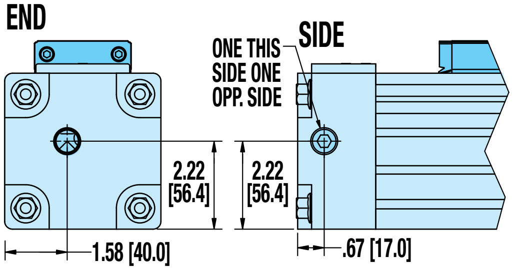

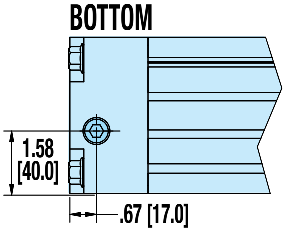

PORT THREAD CHOICES:

TP Rc 3/8-19 TAPER
GP G 3/8-19 PARALLEL
NP 3/8-18 NPTF

3D CAD AVAILABLE AT WWW.TOLOMATIC.COM

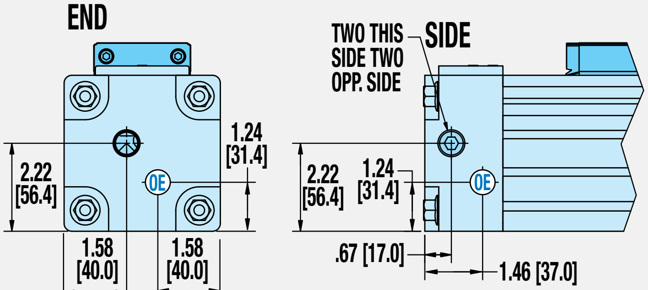

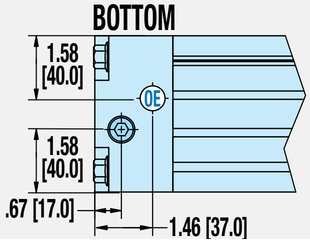

PORT THREAD CHOICES:

ST Rc 3/8-19 TAPER
SG G 3/8-19 PARALLEL
SN 3/8-18 NPTF

Dimensions in inches [brackets indicate dimensions in millimeters]

N-INTERNAL BEARING OPTION DIMENSIONS

AUXILIARY CARRIER, FLOATING MOUNT, FOOT MOUNT, TUBE CLAMPS

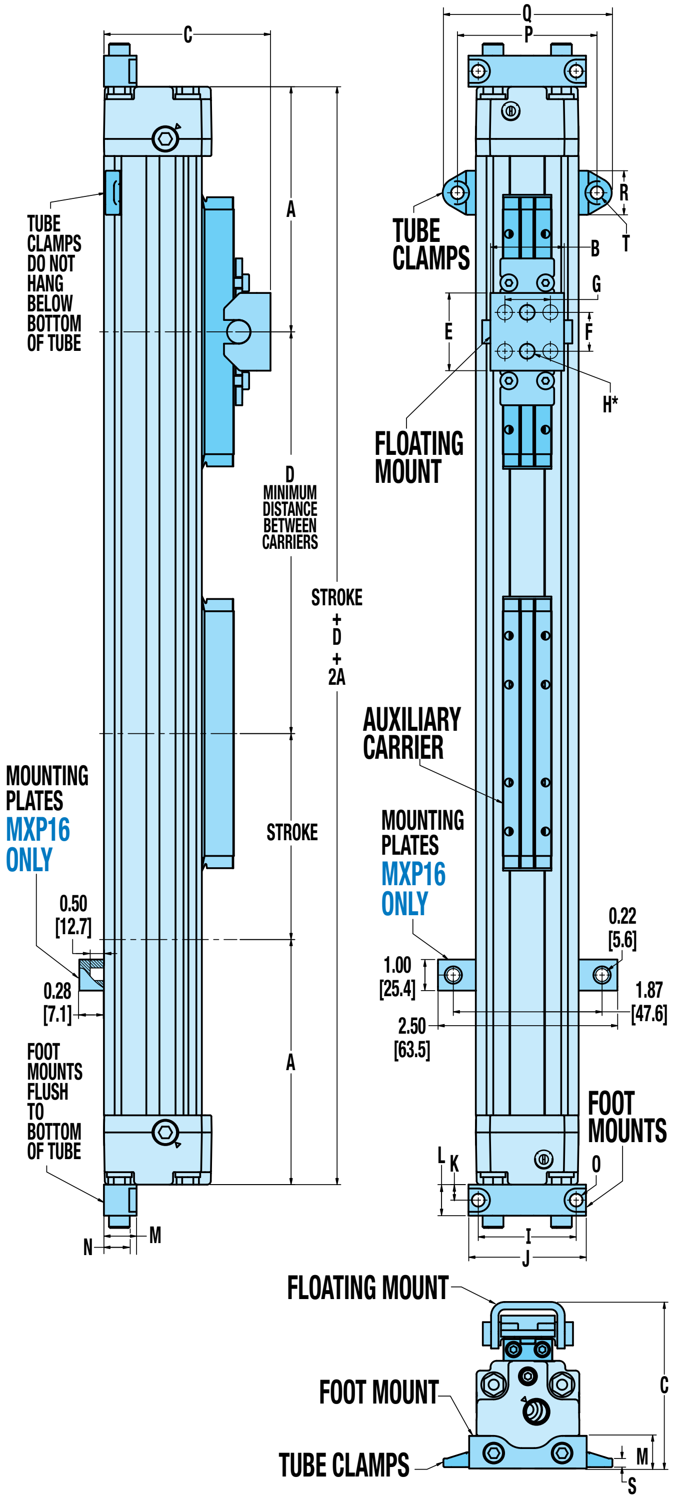

	MXP16	MXP25	MXP32	MXP40	MXP50	MXP63
A	3.13	3.94	4.90	5.82	6.29	8.45
mm	*79.6*	*100.2*	*124.5*	*147.7*	*159.8*	*214.5*
AUXILIARY CARRIER						
D	5.00	6.00	7.00	8.50	8.60	13.00
mm	*127.0*	*152.4*	*177.8*	*215.9*	*218.4*	*330.0*
FLOATING MOUNT						
B	1.27	1.19	2.08	2.55	3.24	3.15
mm	*32.2*	*30.1*	*52.8*	*64.7*	*82.3*	*80.0*
C	1.97	2.66	3.70	4.07	4.66	5.57
mm	*50.1*	*67.5*	*94.1*	*103.3*	*118.4*	*141.6*
E	0.90	1.25	1.50	1.50	3.94	5.20
mm	*22.9*	*31.8*	*38.1*	*38.1*	*100.1*	*132.0*
F	0.50	0.63	0.75	0.79	3.15	4.33
mm	*12.7*	*15.9*	*19.1*	*20.0*	*80.0*	*110.0*
G	-	-	1.00	1.38	-	1.69
mm	*-*	*-*	*25.4*	*35.0*	*-*	*43.0*
H*	0.17(2)	0.24(2)	0.28(4)	0.28(4)	0.36(2)	0.34(4)
mm	*4.3(2)*	*6.1(2)*	*7.1(4)*	*7.1(4)*	*9.1(2)*	*8.7(4)*
FOOT MOUNTS						
I	1.26	1.57	2.01	2.52	3.11	3.94
mm	*32.0*	*40.0*	*51.0*	*64.0*	*78.9*	*100.0*
J	1.57	1.89	2.36	2.91	3.67	4.72
mm	*40.0*	*48.0*	*60.0*	*74.0*	*93.2*	*120.0*
K	0.16	0.25	0.37	0.47	0.50	0.59
mm	*4.0*	*6.4*	*9.5*	*12.0*	*12.7*	*15.0*
L	0.31	0.50	0.75	0.94	1.00	1.18
mm	*8.0*	*12.7*	*19.0*	*24.0*	*25.4*	*30.0*
M	0.35	0.52	0.91	0.73	1.00	1.06
mm	*8.9*	*13.3*	*23.0*	*18.5*	*25.4*	*27.0*
N	-	0.41	0.71	0.45	0.69	0.65
mm	*-*	*10.3*	*18.0*	*11.4*	*17.4*	*16.5*
O	0.18	0.20	0.22	0.28	0.35	0.42
mm	*4.6*	*5.2*	*5.5*	*7.1*	*9.0*	*10.7*
TUBE CLAMPS						
P	-	2.24	2.92	3.26	3.84	5.19
mm	*-*	*57.0*	*74.1*	*82.7*	*97.5*	*131.7*
Q	-	2.72	3.44	3.81	4.39	5.93
mm	*-*	*69.0*	*87.4*	*96.7*	*111.5*	*150.7*
R	-	0.71	0.63	0.55	0.55	0.75
mm	*-*	*18.0*	*16.0*	*14.0*	*14.0*	*19.0*
S	-	0.14	0.17	0.15	0.15	0.24
mm	*-*	*3.6*	*4.3*	*3.8*	*3.8*	*6.1*
T	-	0.20	0.28	0.28	0.28	0.42
mm	*-*	*5.2*	*7.1*	*7.1*	*7.1*	*10.7*

**MXP16, 25 & 50 use 2 center holes,*
MXP32, 40 & 63 use 4 corner holes

NOTE: Auxiliary carrier is N-Internal Bearing carrier, see page MXP_25 for carrier size and mounting dimensions

N-INTERNAL BEARING OPTION DIMENSIONS

ADJUSTABLE AND FIXED SHOCK ABSORBERS

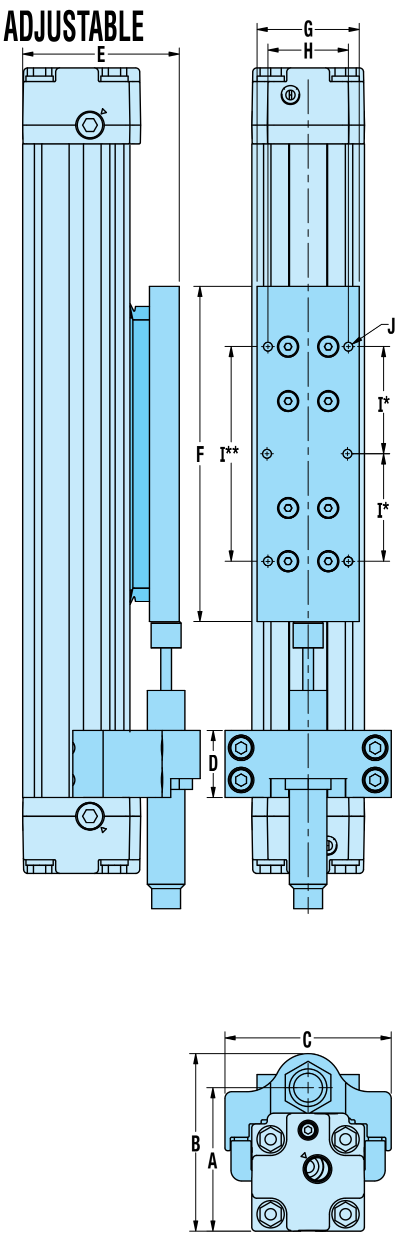

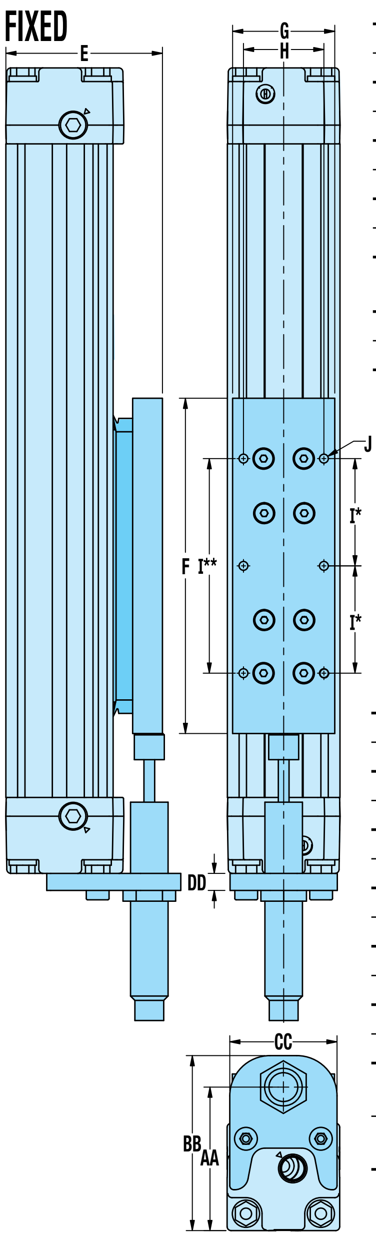

NOTE: Auxiliary carrier is N-Internal Bearing carrier, see page MXP_25 for carrier size and mounting dimensions

ADJUSTABLE SHOCK ABSORBER

	MXP16	MXP25	MXP32	MXP40	MXP50	MXP63
A	1.65	2.11	2.91	3.32	4.24	5.21
mm	*42.0*	*53.5*	*73.8*	*84.4*	*107.6*	*132.4*
B	1.97	2.61	3.35	3.87	4.87	5.91
mm	*50.0*	*66.2*	*85.0*	*98.4*	*123.8*	*150.0*
C	1.74	2.44	2.95	3.43	4.09	5.20
mm	*44.3*	*62.0*	*74.9*	*87.0*	*103.9*	*132.0*
D	0.71	0.98	1.25	0.98	1.22	1.26
mm	*18.0*	*25.0*	*31.8*	*25.0*	*31.0*	*32.0*

Stroke Adder: Adjustable Shock Absorber

in	0.49	1.06	1.17	0.76	0.81	0.51
mm	*12.4*	*26.8*	*29.8*	*19.3*	*20.5*	*13.0*

⚠ NOTE: For each adjustable shock absorber ordered, add Stroke Adder value to required stroke to determine configurated actuator stroke.

Required Stroke + (Adj. Shock Quantity x Stroke Adder value) = Configurated Actuator Stroke

Example: MXP25N, 500mm stroke required, 2 adjustable shocks

500 + (2 x 26.8) = 500 + 53.6 = 553.6mm

SHOCK PLATE

	MXP16	MXP25	MXP32	MXP40	MXP50	MXP63
E	1.81	2.28	3.17	3.61	4.55	5.65
mm	*46.0*	*57.9*	*80.5*	*91.8*	*115.6*	*143.4*
F	3.86	4.92	5.20	6.72***	6.65	10.29****
mm	*98.0*	*125.0*	*132.0*	*170.8****	*168.8*	*261.4*****
G	0.94	1.50	1.32	1.61	2.13	2.44
mm	*24.0*	*38.1*	*33.5*	*41.0*	*54.0*	*62.0*
H	0.63	1.18	0.96	1.05	1.50	1.69
mm	*16.0*	*30.0*	*24.5*	*26.7*	*38.1*	*43.0*
I*	0.89	1.57	-	-	-	-
mm	*22.5*	*40.0*	*-*	*-*	*-*	*-*
I**	-	-	1.75	3.00	2.25	4.33
mm	*-*	*-*	*44.5*	*76.2*	*57.2*	*110.0*
J	#8-32 (6)	#8-32 (6)	#10-32 (4)	1/4-20 (4)	5/16-18 (4)	3/8-16 (4)
mm	*M4x0.8* *(6)*	*M4x0.8* *(6)*	*M5x0.8* *(4)*	*M6x1.0* *(4)*	*M8x1.25* *(4)*	*M10x1.5* *(4)*

**MXP16 & 25 Shock plate has 6 mounting holes*

***MXP32, 40, 50 & 63 Shock plate has 4 mounting holes*

****MXP40 Shock Stop Plate has impact bolts. Actual plate length is 5.98" (152mm); Impact bolts, one on each end, add .74" (18.8mm) to total length*

*****MXP63 Shock Stop Plate has impact bolts. Actual plate length is 9.84" (250mm); Impact bolts, one on each end, add .45" (11.4mm) to total length*

FIXED SHOCK ABSORBER

	MXP16	MXP25	MXP32	MXP40	MXP50	MXP63
AA	1.65	2.11	2.91	3.32	4.24	5.21
mm	*42.0*	*53.5*	*73.8*	*84.4*	*107.6*	*132.3*
BB	1.95	2.57	3.42	3.87	5.09	5.92
mm	*49.5*	*65.3*	*86.8*	*98.4*	*129.2*	*150.3*
CC	1.17	1.57	2.00	2.44	2.83	3.66
mm	*29.8*	*40.0*	*50.8*	*62.0*	*72.0*	*93.0*
DD	0.13	0.25	0.25	0.25	0.50	0.50
mm	*3.3*	*6.4*	*6.4*	*6.4*	*12.7*	*12.7*

S-SOLID BEARING ACTUATOR DIMENSIONS

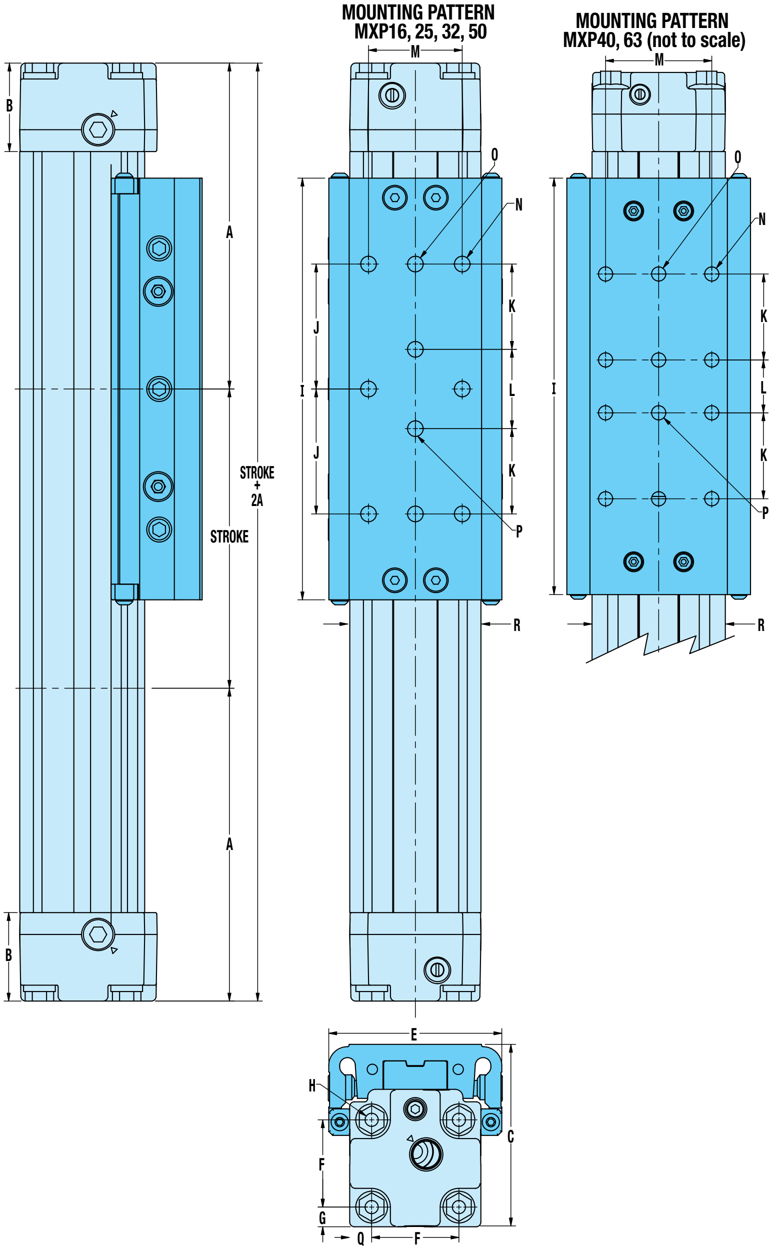

	MXP16	MXP25	MXP32	MXP40	MXP50	MXP63
A	3.13	3.94	4.90	5.82	6.29	8.45
mm	*79.6*	*100.2*	*124.5*	*147.7*	*159.8*	*214.5*
B	0.55	1.11	1.50	1.50	1.97	1.97
mm	*14.0*	*28.3*	*38.1*	*38.0*	*50.0*	*50.0*
C	1.80	2.30	3.06	3.51	4.44	5.48
mm	*45.8*	*58.4*	*77.8*	*89.2*	*112.8*	*139.1*
D	1.18	1.65	2.18	2.52	3.01	3.94
mm	*30.0*	*42.0*	*55.4*	*64.0*	*78.7*	*100.0*
E	1.58	2.18	2.86	3.47	4.01	5.59
mm	*40.1*	*55.4*	*72.6*	*88.2*	*104.1*	*142.0*
F	0.85	1.10	1.42	1.81	2.25	2.87
mm	*21.5*	*27.9*	*36.1*	*46.0*	*57.2*	*73.0*
G	0.17	0.25	0.38	0.35	0.43	0.53
mm	*4.3*	*6.3*	*9.7*	*9.0*	*10.8*	*13.5*
H	#8-32 (8)	#10-24 (8)	1/4-20 (8)	1/4-20 (8)	5/16-18 (8)	5/16-18 (8)
mm	*M4x0.7 (8)*	*M5x0.8 (8)*	*M6x1.0 (8)*	*M6x1.0 (8)*	*M8x1.25 (8)*	*M8x1.25 (8)*
I	4.12	5.31	6.02	7.87	7.91	12.11
mm	*104.6*	*135.0*	*153.0*	*200.0*	*200.8*	*307.5*
J	1.18	1.57	1.77	-	1.87	-
mm	*30.0*	*40.0*	*45.0*	*-*	*47.6*	*-*
K	-	1.07	1.10	1.63	1.25	1.50
mm	*-*	*27.3*	*28.0*	*41.3*	*31.8*	*38.1*
L	-	1.00	1.00	1.00	2.50	3.00
mm	*-*	*25.4*	*25.4*	*25.4*	*63.5*	*76.2*
M	1.18	1.18	1.73	2.01	2.59	3.25
mm	*30.0*	*30.0*	*44.0*	*51.0*	*65.8*	*82.6*
N	#8-32 (6)	1/4-20 (6)	1/4-20 (6)	5/16-18 (8)	3/8-16 (6)	3/8-16 (8)
mm	*M4x0.7 (6)*	*M6x1.0 (6)*	*M8x1.25 (6)*	*M8x1.25 (8)*	*M10x1.5 (6)*	*M10x1.5 (8)*
O	-	#10-32 (2)	1/4-20 (2)	5/16-18 (2)	3/8-16 (2)	3/8-16 (2)
mm	*-*	*M6x1.0 (2)*	*M8x1.25 (2)*	*M8x1.25 (2)*	*M10x1.5 (2)*	*M10x1.5 (2)*
P	-	1/4-20 (2)	1/4-20 (2)	1/4-20 (2)	3/8-16 (2)	3/8-16 (2)
mm	*-*	*M6x1.0 (2)*	*M8x1.25 (2)*	*M8x1.25 (2)*	*M10x1.5 (2)*	*M10x1.5 (2)*
Q	0.17	0.28	0.38	0.35	0.43	0.53
mm	*4.3*	*7.0*	*9.7*	*9.0*	*10.8*	*13.5*
R	1.18	1.65	2.18	2.52	3.10	3.94
mm	*30.00*	*42.00*	*55.37*	*64.00*	*78.74*	*100.00*

S-SOLID BEARING PORTING DIMENSIONS MXP16S, MXP25S, MXP32S

16mm BORE

DUAL END PORTING

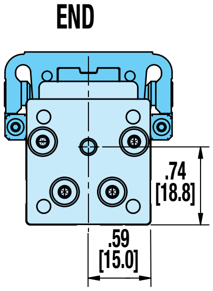

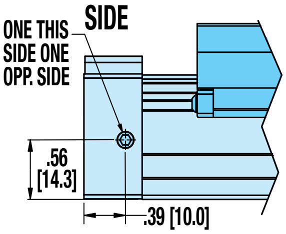

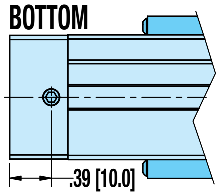

PORT THREAD CHOICES:

GP G M5 x 0.7 PARALLEL

NP NPT #10-32 UNF

SINGLE-END PORTING

Not Available for 16mm BORE

25mm BORE

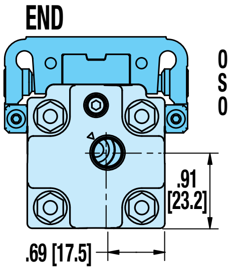

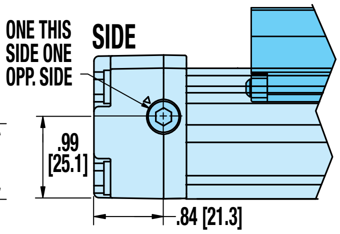

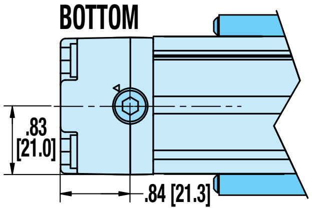

PORT THREAD CHOICES:

TP Rc 1/8-28 TAPER

GP G 1/8-28 PARALLEL

NP 1/8-27 NPTF

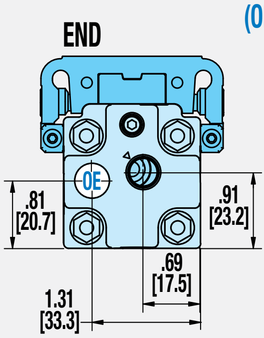

(OE = Opposite End Port)

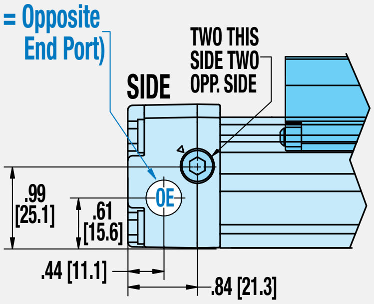

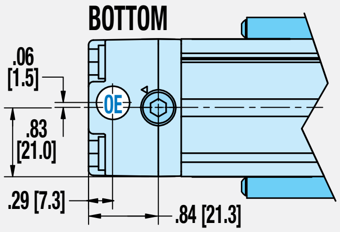

PORT THREAD CHOICES:

ST Rc 1/8-28 TAPER

SG G 1/8-28 PARALLEL

SN 1/8-27 NPTF

32mm BORE

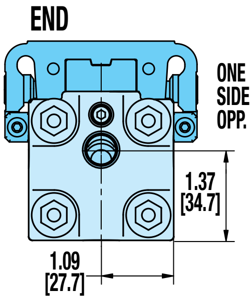

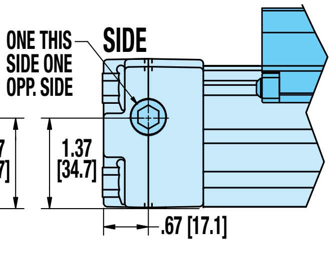

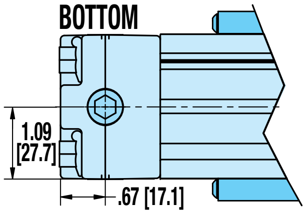

PORT THREAD CHOICES:

TP Rc 1/8-28 TAPER

GP G 1/8-28 PARALLEL

NP 1/8-27 NPTF

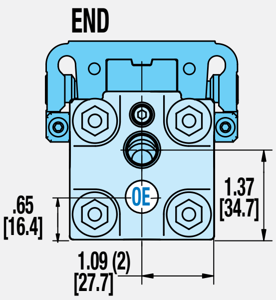

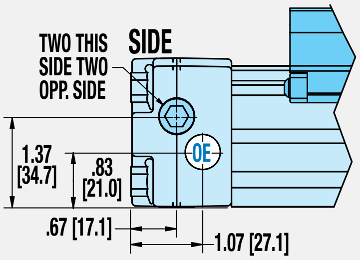

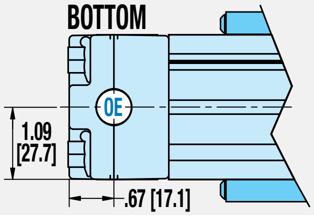

PORT THREAD CHOICES:

ST Rc 1/8-28 TAPER

SG G 1/8-28 PARALLEL

SN 1/8-27 NPTF

Dimensions in inches [brackets indicate dimensions in millimeters]

S-SOLID BEARING PORTING DIMENSIONS MXP40S, MXP50S, MXP63S

DUAL END PORTING

40mm BORE

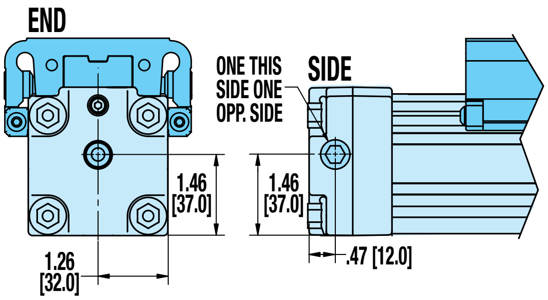

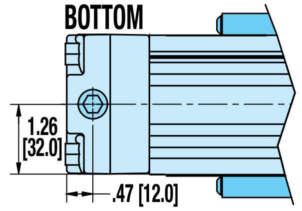

PORT THREAD CHOICES:

TP Rc 1/4-19 TAPER

GP G 1/4-19 PARALLEL

NP 1/4-18 NPTF

50mm BORE

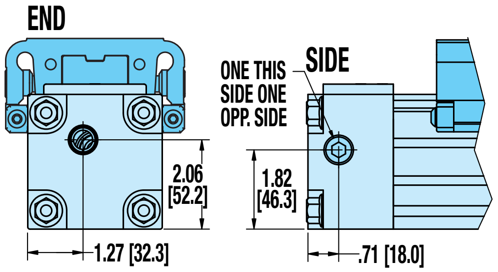

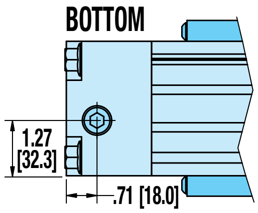

PORT THREAD CHOICES:

TP Rc 3/8-19 TAPER

GP G 3/8-19 PARALLEL

NP 3/8-18 NPTF

63mm BORE

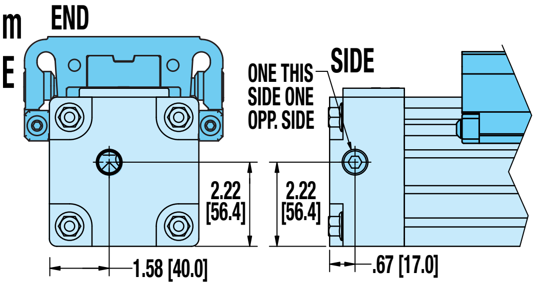

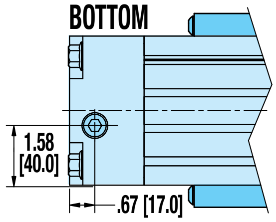

PORT THREAD CHOICES:

TP Rc 3/8-19 TAPER

GP G 3/8-19 PARALLEL

NP 3/8-18 NPTF

SINGLE-END PORTING

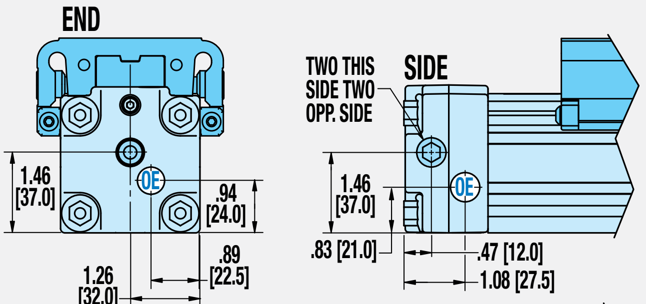

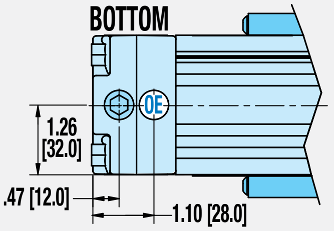

PORT THREAD CHOICES:

ST Rc 1/4-19 TAPER

SG G 1/4-19 PARALLEL

SN 1/4-18 NPTF

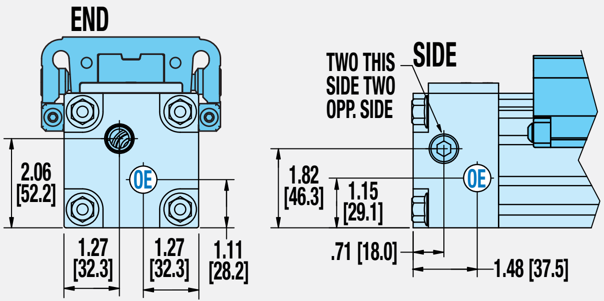

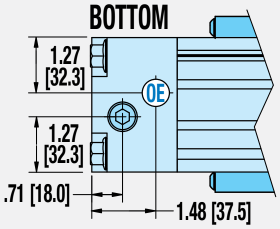

PORT THREAD CHOICES:

ST Rc 3/8-19 TAPER

SG G 3/8-19 PARALLEL

SN 3/8-18 NPTF

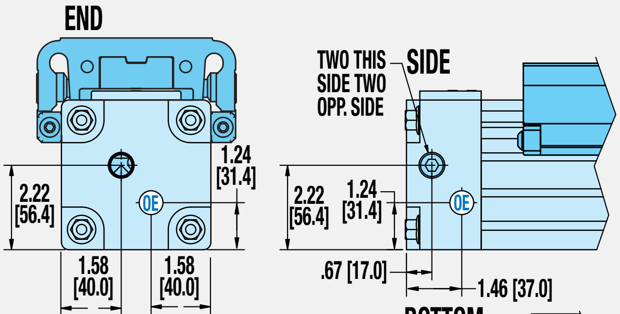

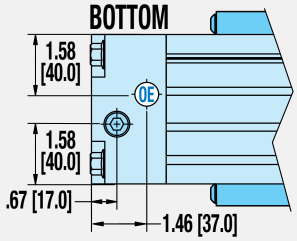

PORT THREAD CHOICES:

ST Rc 3/8-19 TAPER

SG G 3/8-19 PARALLEL

SN 3/8-18 NPTF

Dimensions in inches [brackets indicate dimensions in millimeters]

S-SOLID BEARING OPTION DIMENSIONS

AUXILIARY CARRIER, FLOATING MOUNT, FOOT MOUNT, TUBE CLAMPS

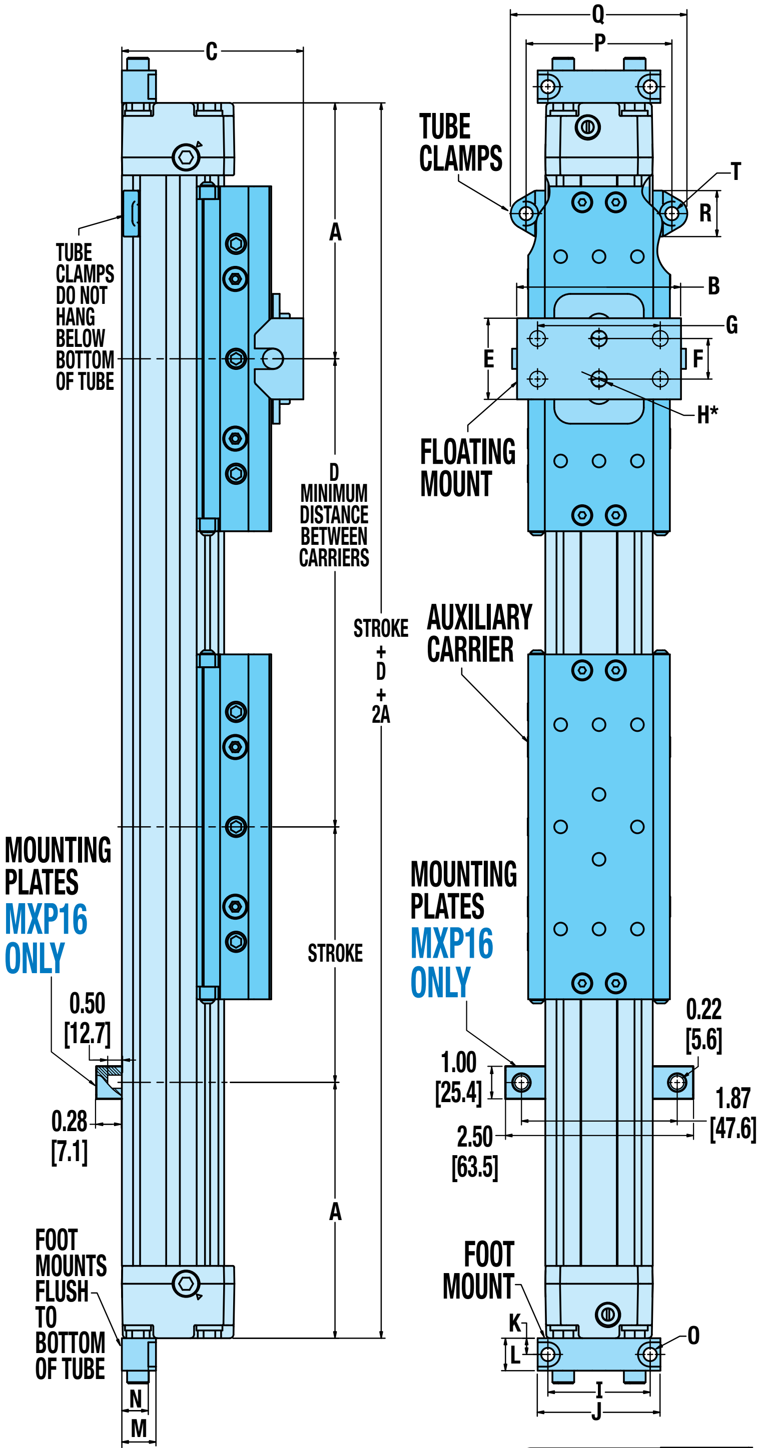

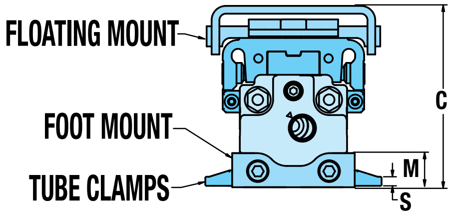

	MXP16	MXP25	MXP32	MXP40	MXP50	MXP63
A	3.13	3.94	4.90	5.82	6.29	8.45
mm	*79.6*	*100.2*	*124.5*	*147.7*	*159.8*	*214.5*
AUXILIARY CARRIER						
D	5.00	6.00	7.00	8.50	8.60	13.00
mm	*127.0*	*152.4*	*177.8*	*215.9*	*218.4*	*330.0*
FLOATING MOUNT						
B	1.86	2.52	3.37	4.32	5.04	6.10
mm	*47.3*	*64.1*	*85.6*	*109.7*	*128.0*	*155.0*
C	2.31	2.80	3.67	4.26	5.24	6.17
mm	58.7	71.0	93.3	108.2	133.1	156.8
E	0.98	1.25	2.76	3.94	3.94	5.00
mm	*25.0*	*31.8*	*70.1*	*100.0*	*100.1*	*127.0*
F	0.47	0.63	1.97	2.95	3.15	3.94
mm	*12.0*	*15.9*	*50.0*	*74.9*	*80.0*	*100.1*
G	-	-	-	2.17	-	2.76
mm	*-*	*-*	*-*	*55.1*	*-*	*70.1*
H*	0.18(2)	0.24(2)	0.28(2)	0.28(4)	0.36(2)	0.34(4)
mm	*4.5(2)*	*6.1(2)*	*7.1(2)*	*7.1(4)*	*9.1(2)*	*8.7(4)*
FOOT MOUNT						
I	1.26	1.57	2.01	2.52	3.11	3.94
mm	*32.0*	*40.0*	*51.0*	*64.0*	*78.9*	*100.0*
J	1.57	1.89	2.36	2.91	3.67	4.72
mm	*40.0*	*48.0*	*60.0*	*74.0*	*93.2*	*120.0*
K	0.16	0.25	0.37	0.47	0.50	0.59
mm	*4.0*	*6.4*	*9.5*	*12.0*	*12.7*	*15.0*
L	0.31	0.50	0.75	0.94	1.00	1.18
mm	*8.0*	*12.7*	*19.0*	*24.0*	*25.4*	*30.0*
M	0.35	0.52	0.91	0.73	1.00	1.06
mm	*8.9*	*13.3*	*23.0*	*18.5*	*25.4*	*27.0*
N	-	0.41	0.71	0.45	0.69	0.65
mm	*-*	*10.3*	*18.0*	*11.4*	*17.4*	*16.5*
O	0.18	0.20	0.22	0.28	0.35	0.42
mm	*4.6*	*5.2*	*5.5*	*7.1*	*9.0*	*10.7*
TUBE CLAMPS						
P	-	2.24	2.92	3.26	3.84	5.19
mm	*-*	*57.0*	*74.1*	*82.7*	*97.5*	*131.7*
Q	-	2.72	3.44	3.81	4.39	5.93
mm	*-*	*69.0*	*87.4*	*96.7*	*111.5*	*150.7*
R	-	0.71	0.63	0.55	0.55	0.75
mm	*-*	*18.0*	*16.0*	*14.0*	*14.0*	*19.0*
S	-	0.14	0.17	0.15	0.15	0.24
mm	*-*	*3.6*	*4.3*	*3.8*	*3.8*	*6.1*
T	-	0.20	0.28	0.28	0.28	0.42
mm	*-*	*5.2*	*7.1*	*7.1*	*7.1*	*10.7*

**MXP16, 25, 32 & 50 use 2 center holes,*
MXP40 & 63 use 4 corner holes

NOTE: Auxiliary carrier is S-Solid Bearing carrier, see page MXP_30 for carrier size and mounting dimensions

ABT
MXP
BC2
BC3
BC4
LS
MG
CC
PB
ENGR

S-SOLID BEARING OPTION DIMENSIONS

ADJUSTABLE AND FIXED SHOCK ABSORBERS

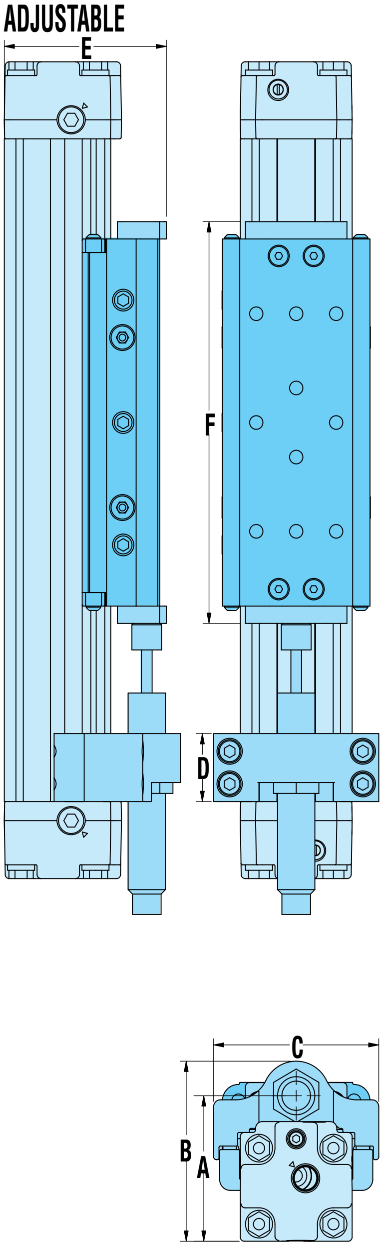

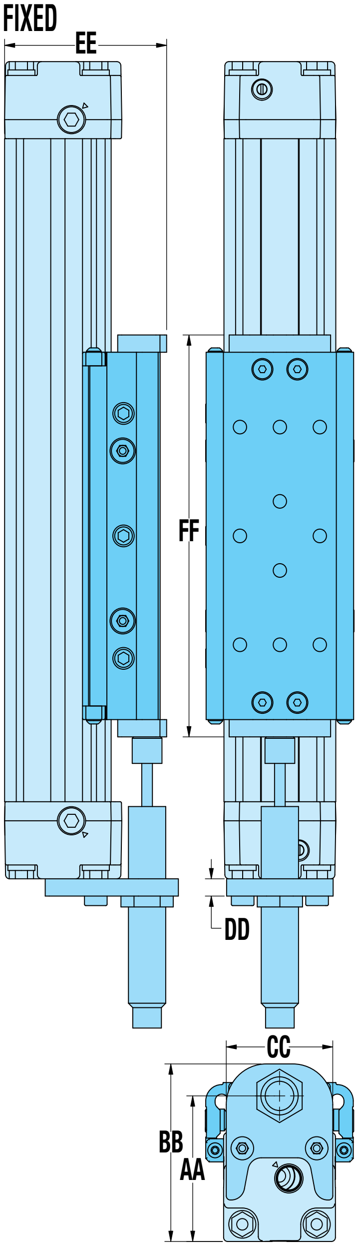

NOTE: Auxiliary carrier is S-Solid Bearing carrier, see page MXP_30 for carrier size and mounting dimensions

ADJUSTABLE SHOCK ABSORBER

	MXP16	MXP25	MXP32	MXP40	MXP50	MXP63
A	1.65	2.11	2.91	3.32	4.24	5.21
mm	42.0	53.5	73.8	84.4	107.6	132.4
B	1.97	2.61	3.35	3.87	4.87	5.91
mm	50.0	66.2	85.0	98.4	123.8	150.0
C	1.74	2.44	2.95	3.43	4.09	5.20
mm	44.3	62.0	74.9	87.0	103.9	132.0
D	0.71	0.98	1.25	0.98	1.22	1.26
mm	18.0	25.0	31.8	25.0	31.0	32.0
E	1.80	2.39[1]	3.20[2]	3.57[3]	4.53[4]	5.50[5]
mm	45.8	60.8[1]	81.2[2]	90.7[3]	115.1[4]	139.7[5]
F	4.12	5.81[1]	6.76[2]	8.61[3]	8.35[4]	12.56[5]
mm	104.6	147.7[1]	171.8[2]	218.8[3]	212.2[4]	318.9[5]

Stroke Adder: Adjustable Shock Absorber

in.	0.62	1.50	1.96	1.70	1.66	1.65
mm	15.7	38.1	49.7	43.3	42.1	41.8

⚠ NOTE: For each adjustable shock absorber ordered, add Stroke Adder value to required stroke to determine configurated actuator stroke.

Required Stroke + (Adj. Shock Quantity x Stroke Adder value) = Configurated Actuator Stroke

Example: MXP25S, 500mm stroke required, 2 adjustable shocks

500 + (2 x 38.1) = 500 + 76.2 = 576.2mm

FIXED SHOCK ABSORBER

	MXP16	MXP25	MXP32	MXP40	MXP50	MXP63
AA	1.65	2.11	2.91	3.32	4.24	5.21
mm	42.0	53.5	73.8	84.4	107.6	132.4
BB	1.95	2.57	3.42	3.87	5.10	5.92
mm	49.5	65.3	86.8	98.4	129.6	150.3
CC	1.17	1.57	2.00	2.44	2.83	3.66
mm	29.8	40.0	50.8	62.0	72.0	93.0
DD	0.13	0.25	0.25	0.25	0.50	0.50
mm	3.3	6.4	6.4	6.4	12.7	12.7
EE	1.80	2.39[1]	3.20[2]	3.57[3]	4.53[4]	5.50[5]
mm	45.8	60.8[1]	81.2[2]	90.7[3]	115.1[4]	139.7[5]
FF	4.12	5.81[1]	6.76[2]	8.61[3]	8.35[4]	12.56[5]
mm	104.6	147.7[1]	171.8[2]	218.8[3]	212.2[4]	318.9[5]

[1] *Carrier is standard MXP25S, 2.30" (58.4mm) high X 5.31" (135.0mm) long, Impact plates on each end of carrier add .09" (2.4mm) to total height and .50" (12.7mm) to total length*

[2] *Carrier is standard MXP32S, 3.06" (77.8mm) high X 6.02" (153.0mm) long, Impact bolts on each end of carrier add .13" (3.4mm) to total height and .74" (18.8mm) to total length*

[3] *Carrier is standard MXP40S, 3.51" (89.2mm) high X 7.87" (200.0mm) long, Impact bolts on each end of carrier add .06" (1.5mm) to total height and .74" (18.8mm) to total length*

[4] *Carrier is standard MXP50S, 4.44" (112.8mm) high X 7.91" (200.8mm) long, Impact bolts on each end of carrier add .09" (2.3mm) to total height and .45" (11.4mm) to total length*

[5] *Carrier is standard MXP63S, 5.48" (139.1mm) high X 12.11" (307.5mm) long, Impact bolts on each end of carrier add .45" (11.4mm) to total length*

P-PROFILED RAIL ACTUATOR DIMENSIONS

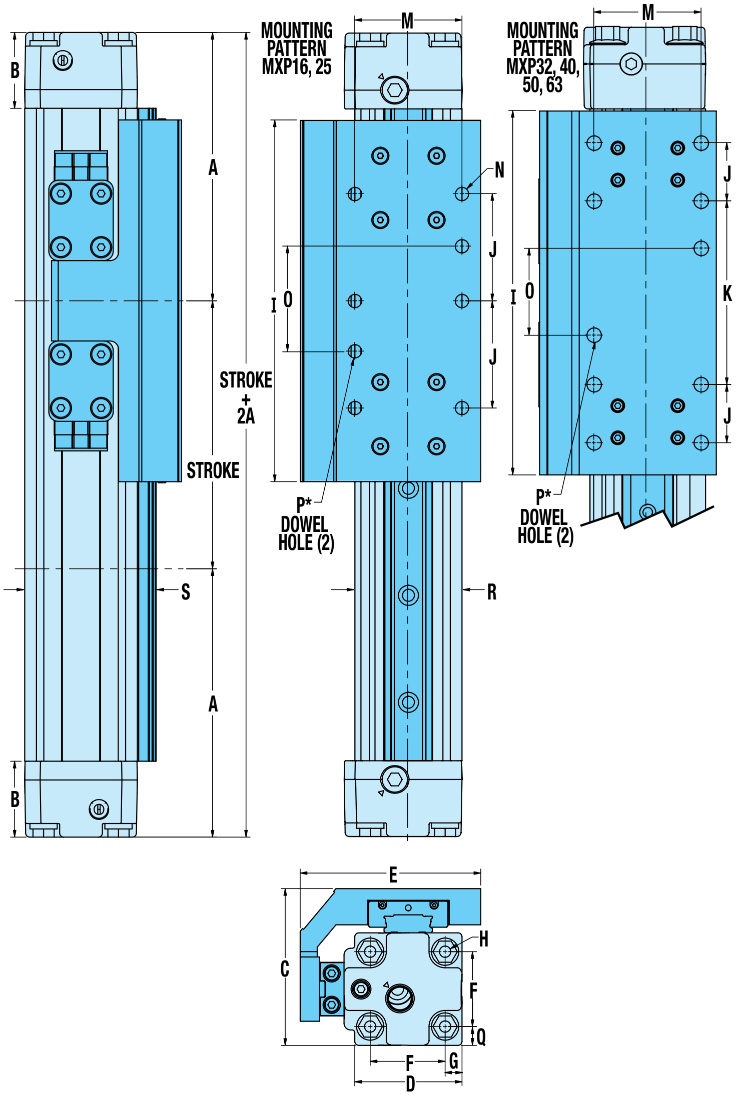

	MXP16	MXP25	MXP32	MXP40	MXP50	MXP63
A	3.13	3.94	4.89	5.79	6.26	8.42
mm	79.6	100.2	124.1	147.1	159.1	213.8
B	0.55	1.11	1.50	1.50	1.97	1.97
mm	14.0	28.3	38.1	38.0	50.0	50.0
C	1.81	2.30	3.05	3.53	4.71	5.51
mm	46.0	58.5	77.4	89.7	119.7	140.0
D	1.19	1.57	2.13	2.52	3.01	2.87
mm	30.3	40.0	54.0	64.0	78.7	73.0
E	1.78	2.65	3.25	3.85	4.62	5.65
mm	45.3	67.4	82.5	97.8	117.4	143.6
F	0.85	1.10	1.42	1.81	2.25	2.87
mm	21.5	27.9	36.1	46.0	57.2	73.0
G	0.17	0.28	0.38	0.35	0.43	0.53
mm	4.3	7.0	9.7	9.0	10.8	13.5
H	#8-32 (8)	#10-24 (8)	1/4-20 (8)	1/4-20 (8)	5/16-18 (8)	5/16-18 (8)
mm	M4x0.7 (8)	M5x0.8 (8)	M6x1.0 (8)	M6x1.0 (8)	M8x1.25 (8)	M8x1.25 (8)
I	4.33	5.31	6.69	7.87	8.50	12.00
mm	110.0	135.0	170.0	200.0	216.0	304.8
J	1.57	1.57	1.07	1.00	1.00	1.57
mm	40.0	40.0	27.1	25.4	25.4	40.0
K	-	-	3.37	4.50	2.75	5.12
mm	-	-	85.7	114.3	69.9	130.0
M	1.102	1.575	1.969	2.835	3.125	3.870
mm	28.00	40.00	50.00	72.00	79.38	98.30
N	#8-32 (6)	1/4-20 (6)	5/16-18 (8)	5/16-18 (8)	5/16-18 (10)	3/8-16 (8)
mm	M4x0.7 (6)	M6x1.0 (6)	M8x1.25 (8)	M8x1.25 (8)	M8x1.25 (10)	M10x1.5 (8)
O	1.575	1.575	1.772	2.500	1.500	2.559
mm	40.00	40.00	45.00	63.50	38.10	65.00
P*	Ø.1583/ .1573 ↧.250(2)	Ø.2520/ .2512 ↧.250(2)	Ø.3145/ .3135 ↧.375(2)	Ø.3145/ .3135 ↧.500(2)	Ø.3145/ .3135 ↧.500(2)	Ø.3770/ .3760 ↧.500(2)
mm	Ø4.046 /4.021 ↧6.35(2)	Ø6.045 /6.020 ↧6.35(2)	Ø8.045 /8.020 ↧9.53(2)	Ø8.045 /8.020 ↧12.70(2)	Ø8.045 /8.020 ↧12.70(2)	Ø10.045 /10.020 ↧12.70(2)
Q	0.17	0.28	0.38	0.35	0.43	0.53
mm	4.3	7.0	9.7	9.0	10.8	13.5
R	1.181	1.58	2.13	2.52	3.10	3.94
mm	30.00	40.00	54.00	64.00	78.74	100.00
S	1.40	1.91	2.48	2.89	3.69	4.53
mm	35.50	48.60	62.87	73.50	93.74	115.00

*DOWEL HOLES

⌖	0.003 in Ⓜ
⌖	*0.08 mm* Ⓜ

3D CAD AVAILABLE AT WWW.TOLOMATIC.COM

P-PROFILED RAIL PORTING DIMENSIONS MXP16P, MXP25P, MXP32P

DUAL END PORTING

SINGLE-END PORTING

16mm BORE

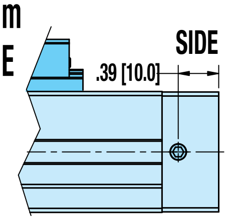

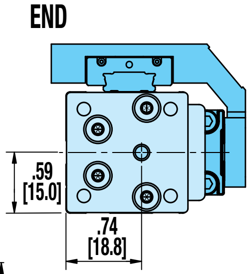

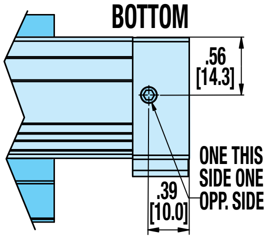

PORT THREAD CHOICES:

GP G M5 x 0.7 PARALLEL
NP NPT #10-32 UNF

Not Available for 16mm BORE

25mm BORE

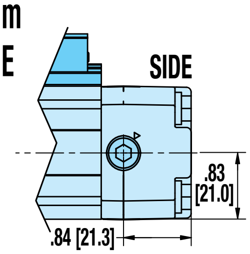

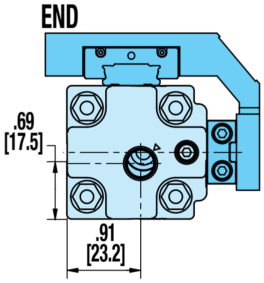

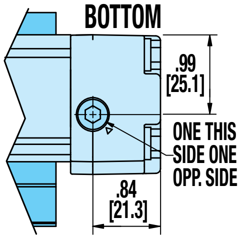

PORT THREAD CHOICES:

TP Rc 1/8-28 TAPER
GP G 1/8-28 PARALLEL
NP 1/8-27 NPTF

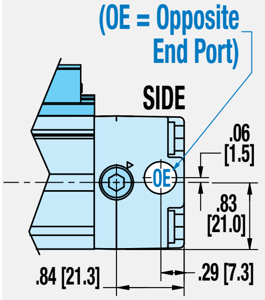

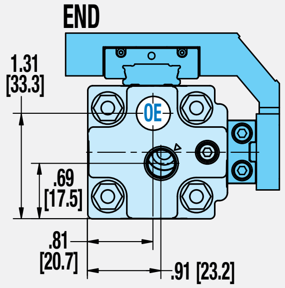

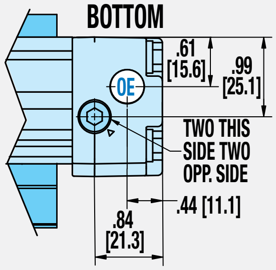

PORT THREAD CHOICES:

ST Rc 1/8-28 TAPER
SG G 1/8-28 PARALLEL
SN 1/8-27 NPTF

32mm BORE

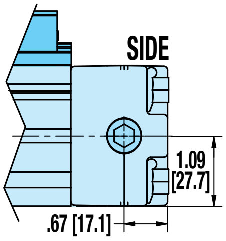

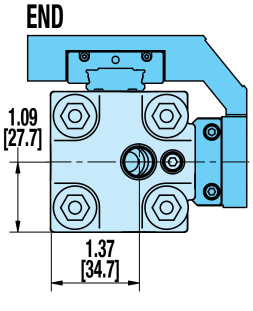

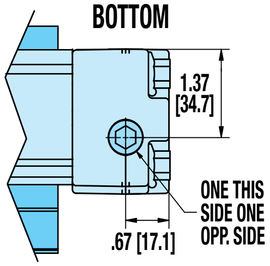

PORT THREAD CHOICES:

TP Rc 1/8-28 TAPER
GP G 1/8-28 PARALLEL
NP 1/8-27 NPTF

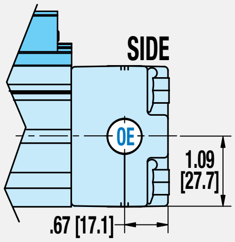

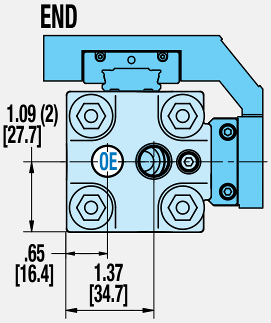

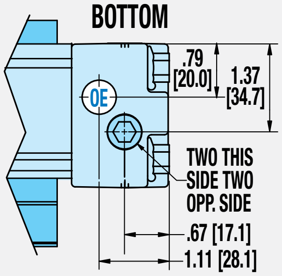

PORT THREAD CHOICES:

ST Rc 1/8-28 TAPER
SG G 1/8-28 PARALLEL
SN 1/8-27 NPTF

P-PROFILED RAIL PORTING DIMENSIONS MXP40P, MXP50P, MXP63P

40mm BORE

DUAL END PORTING

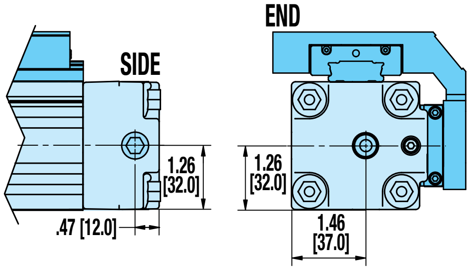

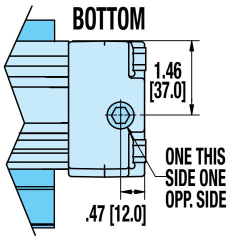

PORT THREAD CHOICES:

- **TP** Rc 1/4-19 TAPER
- **GP** G 1/4-19 PARALLEL
- **NP** 1/4-18 NPTF

SINGLE-END PORTING

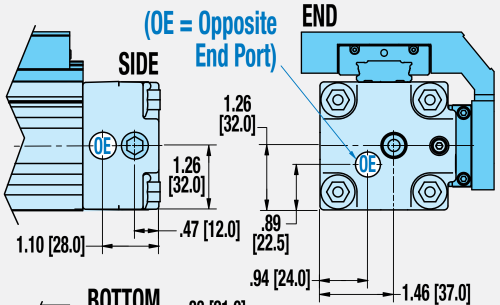

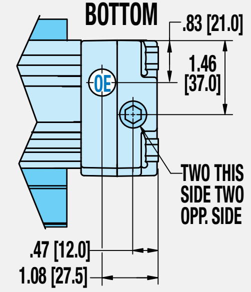

PORT THREAD CHOICES:

- **ST** Rc 1/4-19 TAPER
- **SG** G 1/4-19 PARALLEL
- **SN** 1/4-18 NPTF

50mm BORE

DUAL END PORTING

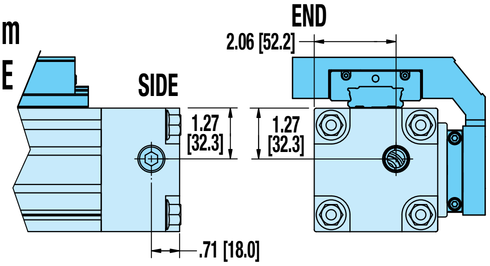

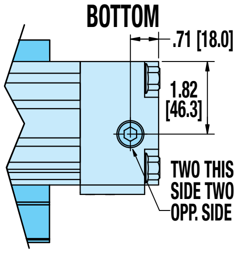

PORT THREAD CHOICES:

- **TP** Rc 3/8-19 TAPER
- **GP** G 3/8-19 PARALLEL
- **NP** 3/8-18 NPTF

SINGLE-END PORTING

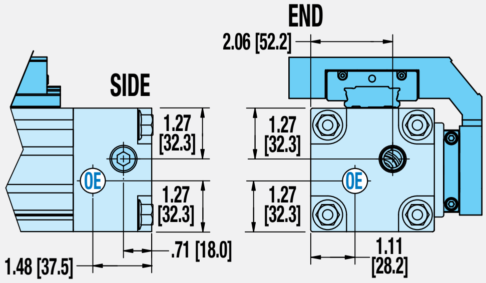

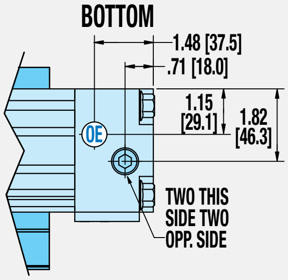

PORT THREAD CHOICES:

- **ST** Rc 3/8-19 TAPER
- **SG** G 3/8-19 PARALLEL
- **SN** 3/8-18 NPTF

63mm BORE

DUAL END PORTING

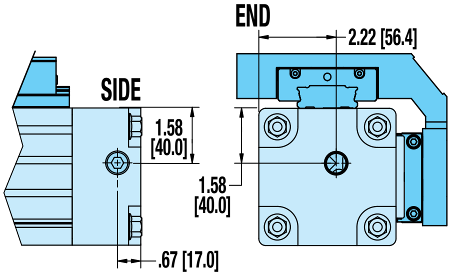

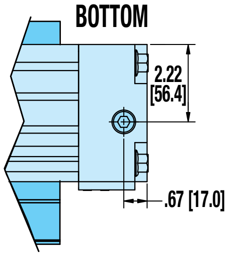

PORT THREAD CHOICES:

- **TP** Rc 3/8-19 TAPER
- **GP** G 3/8-19 PARALLEL
- **NP** 3/8-18 NPTF

SINGLE-END PORTING

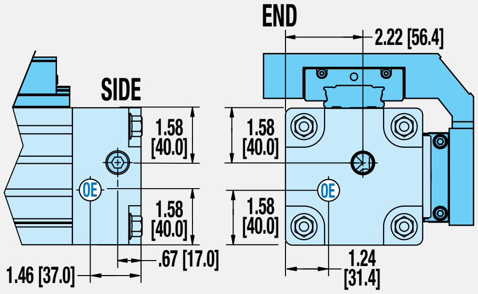

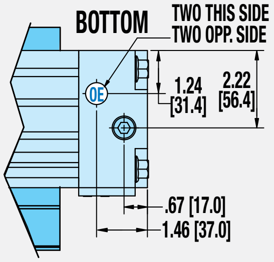

PORT THREAD CHOICES:

- **ST** Rc 3/8-19 TAPER
- **SG** G 3/8-19 PARALLEL
- **SN** 3/8-18 NPTF

P-PROFILED RAIL OPTION DIMENSIONS

AUXILIARY CARRIER, FOOT MOUNT, TUBE CLAMPS

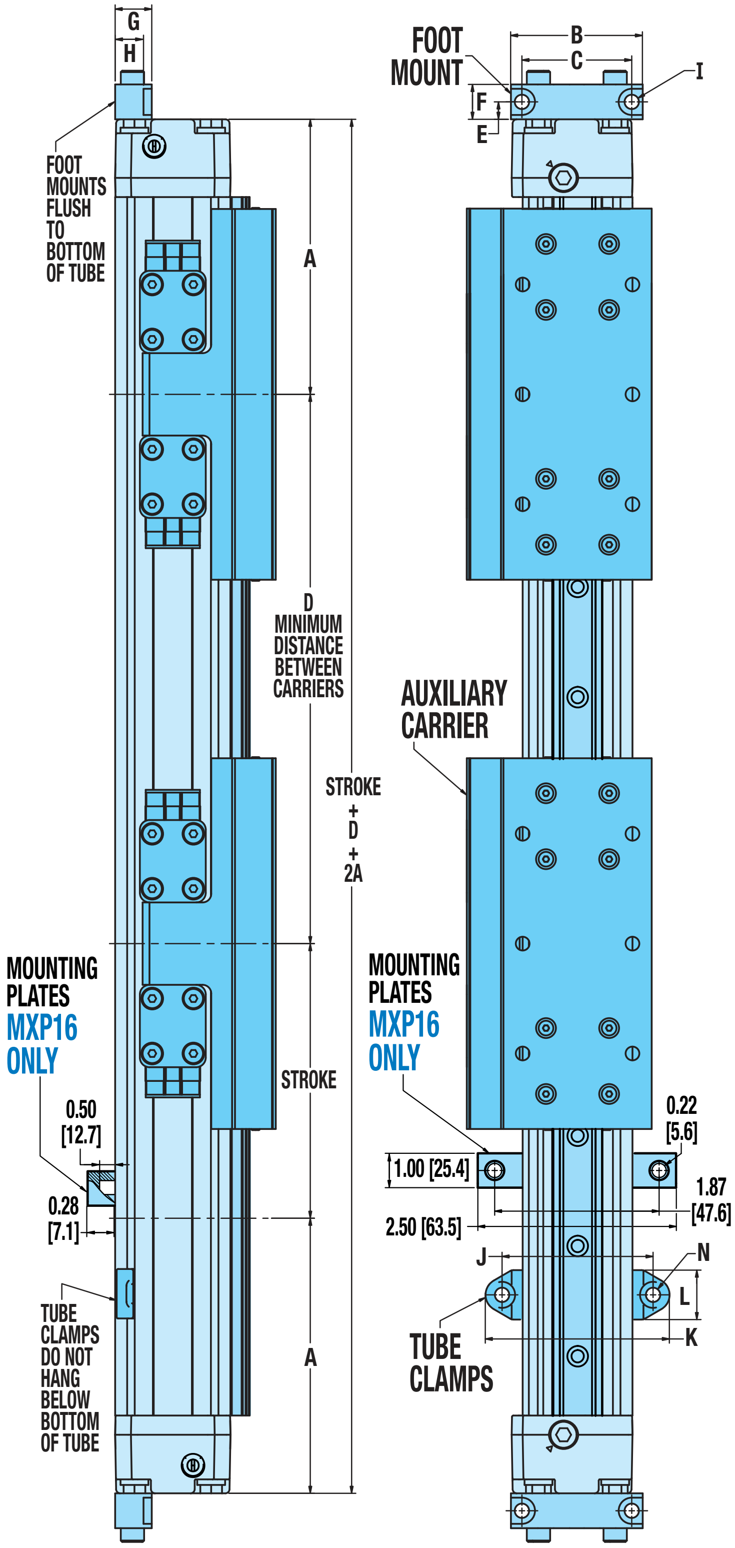

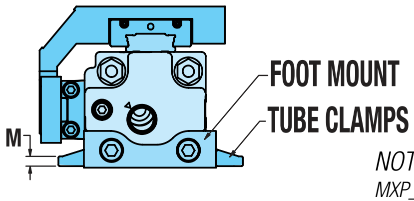

	MXP16	MXP25	MXP32	MXP40	MXP50	MXP63
A	3.13	3.94	4.90	5.82	6.29	8.45
mm	*79.6*	*100.2*	*124.5*	*147.7*	*159.8*	*214.5*
AUXILIARY CARRIER						
D	5.00	6.00	7.00	8.50	8.60	13.00
mm	*127.0*	*152.4*	*177.8*	*215.9*	*218.4*	*330.0*
FOOT MOUNT						
B	1.57	1.89	2.36	2.91	3.67	4.72
mm	*40.0*	*48.0*	*60.0*	*74.0*	*93.2*	*120.0*
C	1.26	1.57	2.01	2.52	3.11	3.94
mm	*32.0*	*40.0*	*51.0*	*64.0*	*78.9*	*100.0*
E	0.16	0.25	0.37	0.47	0.50	0.59
mm	*4.0*	*6.4*	*9.5*	*12.0*	*12.7*	*15.0*
F	0.31	0.50	0.75	0.94	1.00	1.18
mm	*8.0*	*12.7*	*19.0*	*24.0*	*25.4*	*30.0*
G	0.35	0.52	0.91	0.73	1.00	1.06
mm	*8.9*	*13.3*	*23.0*	*18.5*	*25.4*	*27.0*
H	-	0.41	0.71	0.45	0.69	0.65
mm	*-*	*10.3*	*18.0*	*11.4*	*17.4*	*16.5*
I	0.18	0.20	0.22	0.28	0.35	0.42
mm	*4.6*	*5.2*	*5.5*	*7.1*	*9.0*	*10.7*
TUBE CLAMPS						
J	-	2.17	2.86	3.26	3.84	5.19
mm	*-*	*55.0*	*72.7*	*82.7*	*97.5*	*131.7*
K	-	2.64	3.39	3.81	4.39	5.93
mm	*-*	*67.0*	*86.0*	*96.7*	*111.5*	*150.7*
L	-	0.71	0.63	0.55	0.55	0.75
mm	*-*	*18.0*	*16.0*	*14.0*	*14.0*	*19.0*
M	-	0.14	0.17	0.15	0.15	0.24
mm	*-*	*3.6*	*4.3*	*3.8*	*3.8*	*6.1*
N	-	0.20	0.28	0.28	0.28	0.42
mm	*-*	*5.2*	*7.1*	*7.1*	*7.1*	*10.7*

NOTE: Auxiliary carrier is P-Prodiled Rail carrier, see page MXP_35 for carrier size and mounting dimensions

P-PROFILED RAIL OPTION DIMENSIONS

ADJUSTABLE AND FIXED SHOCK ABSORBERS

ADJUSTABLE

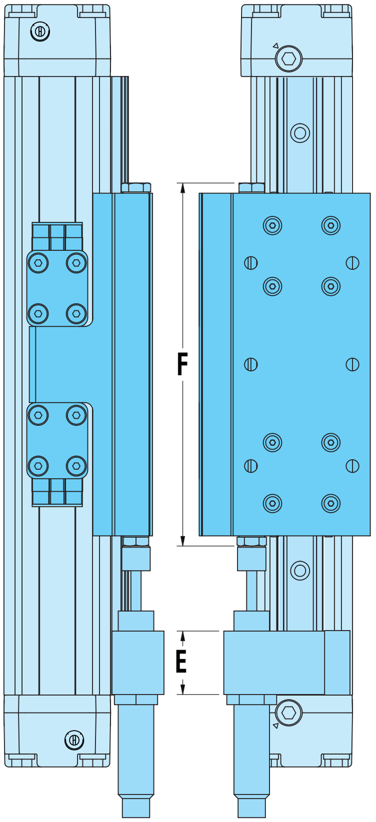

FIXED

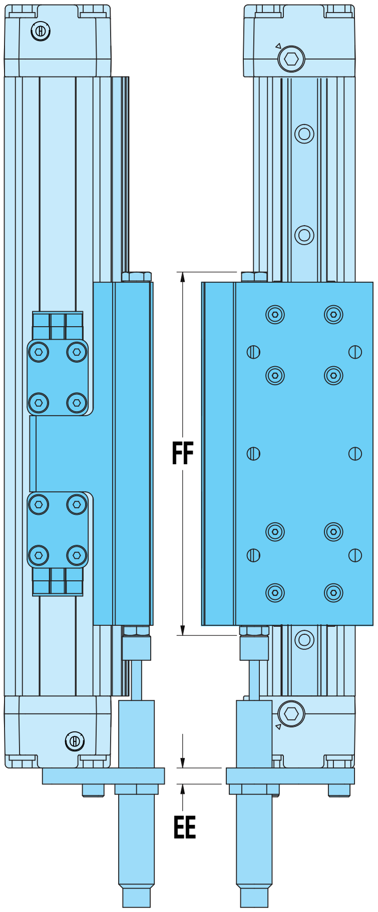

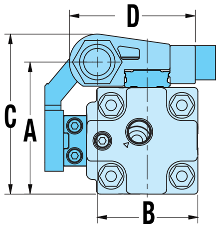

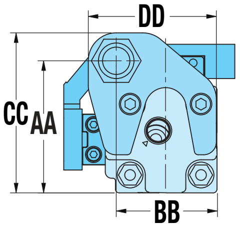

NOTE: Auxiliary carrier is P-Prodiled Rail carrier, see page MXP_35 for carrier size and mounting dimensions

ADJUSTABLE SHOCK ABSORBER

	MXP16	MXP25	MXP32	MXP40	MXP50	MXP63
A	1.51	2.05	2.87	3.28	4.20	5.04
mm	*38.3*	*52.0*	*72.9*	*83.2*	*106.7*	*128.0*
B	1.38	1.56	2.25	2.63	3.55	3.97
mm	*35.0*	*39.7*	*57.2*	*66.8*	*90.2*	*100.8*
C	1.75	2.48	3.46	3.90	4.80	5.73
mm	*44.5*	*63.0*	*87.9*	*99.0*	*121.8*	*145.5*
D	1.54	1.96	2.63	3.17	3.55	4.07
mm	*39.2*	*49.7*	*66.7*	*80.6*	*90.2*	*103.3*
E	0.79	0.98	1.00	0.98	1.26	1.26
mm	*20.0*	*25.0*	*25.4*	*25.0*	*32.0*	*32.0*
F	4.65[1]	5.63[2]	7.43[3]	8.61[4]	8.95[5]	12.45[6]
mm	*118.0*[1]	*143.0*[2]	*188.8*[3]	*218.8*[4]	*227.4*[5]	*316.2*[6]

Stroke Adder: Adjustable Shock Absorber

in	0.96	2.10	2.73	2.40	3.15	2.74
mm	*24.4*	*53.3*	*69.3*	*61.0*	*80.0*	*69.6*

⚠ NOTE: For each adjustable shock absorber ordered, add Stroke Adder value to required stroke to determine configurated actuator stroke.

Required Stroke + (Adj. Shock Quantity x Stroke Adder value) = Configurated Actuator Stroke

Example: MXP25P, 500mm stroke required, 2 adjustable shocks

500 + (2 x 53.3) = 500 + 106.6 = 606.6mm

FIXED SHOCK ABSORBER

	MXP16	MXP25	MXP32	MXP40	MXP50	MXP63
AA	1.51	2.05	2.89	3.32	4.38	5.22
mm	*38.3*	*52.0*	*73.4*	*84.4*	*111.2*	*132.5*
BB	1.38	1.56	–	–	–	–
mm	*35.0*	*39.7*	–	–	–	–
CC	1.80	2.48	3.41	3.87	5.09	5.93
mm	*45.8*	*63.0*	*86.5*	*98.4*	*129.2*	*150.5*
DD	1.66	1.98	2.00	2.44	2.83	3.66
mm	*42.2*	*50.4*	*50.8*	*62.0*	*72.0*	*93.0*
EE	0.13	0.25	0.25	0.25	0.50	0.50
mm	*3.3*	*6.4*	*6.4*	*6.4*	*12.7*	*12.7*
FF	4.65[1]	5.63[2]	7.43[3]	8.61[4]	8.95[5]	12.45[6]
mm	*118.0*[1]	*143.0*[2]	*188.8*[3]	*218.8*[4]	*227.4*[5]	*316.2*[6]

[1] *Carrier is standard MXP16P, 4.33" (110.0mm) long, Impact bolts on each end of carrier add .31" (8.0mm) to total length*

[2] *Carrier is standard MXP25P, 5.31" (135.0mm) long, Impact bolts on each end of carrier add .31" (8.0mm) to total length*

[3] *Carrier is standard MXP32P, 6.69" (170.0mm) long, Impact bolts on each end of carrier add .74" (18.8mm) to total length*

[4] *Carrier is standard MXP40P, 7.87" (200.0mm) long, Impact bolts on each end of carrier add .74" (18.8mm) to total length*

[5] *Carrier is standard MXP50P, 8.50" (216.0mm) long, Impact bolts on each end of carrier add .45" (11.4mm) to total length*

[6] *Carrier is standard MXP63P, 12.00" (304.8mm) long, Impact bolts on each end of carrier add .45" (11.4mm) to total length*

SWITCHES

SPECIFICATIONS

RoHS COMPLIANT CE

MX products offer a large number of sensing choices. There are 12 switch choices: reed, solid state PNP (sourcing) or solid state NPN (sinking); in normally open or normally closed; with flying leads or quick-disconnects.

Commonly used for end-of-stroke positioning, these switches allow drop-in installation anywhere along the entire actuator length. The one-piece design includes the retained fastening hardware and is designed for any open side or bottom slot on the MX. The internal piston magnet is a standard feature, therefore these switches can be installed in the field at anytime.

Switches are used to send digital signals to PLC (programmable logic controller), TTL, CMOS circuit or other controller device. Switches contain reverse polarity protection. Solid state QD cables are shielded; shield should be terminated at flying lead end.

All switches are CE rated and are RoHS compliant. Switches feature bright red or yellow LED signal indicators; solid state switches also have green LED power indicators.

	Order Code	Lead	Switching Logic	Power LED	Signal LED	Operating Voltage	*Power Rating (Watts)	Switching Current (mA max.)	Current Consump-tion	Voltage Drop	Leakage Current	Temp. Range	Shock / Vibration
REED	RY	5m	SPST Normally Open	—	Red	5 - 240 AC/DC	*10.0	100mA	—	3.0 V max.	—	14 to 158°F [-10 to 70°C]	50 G / 9 G
	RK	Quick Disconnect											
	NY	5m	SPST Normally Closed	—	Yellow	5 - 110 AC/DC							
	NK	Quick Disconnect											
SOLID STATE	TY	5m	PNP (Sourcing) Normally Open	Green	Yellow	10 - 30 Vdc	*3.0	100mA	20 mA @ 24V	2.0 V max.	0.05 mA max.		
	TK	Quick Disconnect											
	KY	5m	NPN (Sinking) Normally Open	Green	Red								
	KK	Quick Disconnect											
	PY	5m	PNP (Sourcing) Normally Closed	Green	Yellow								
	PK	Quick Disconnect											
	HY	5m	NPN (Sinking) Normally Closed	Green	Red								
	HK	Quick Disconnect											

Enclosure classification IEC 529 IP67 (NEMA 6)

CABLES: Robotic grade, oil resistant polyurethane jacket, PVC insulation

⚠*WARNING: Do not exceed power rating (Watt = Voltage x Amperage). Permanent damage to sensor will occur.

SWITCHES

WIRING DIAGRAMS

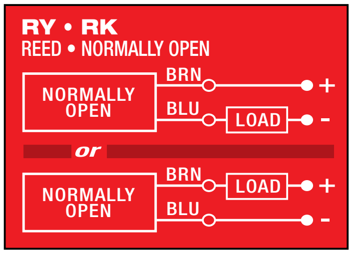

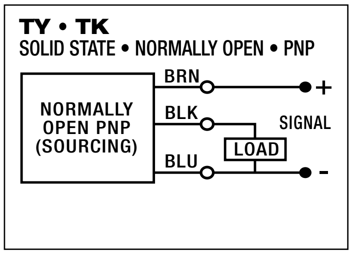

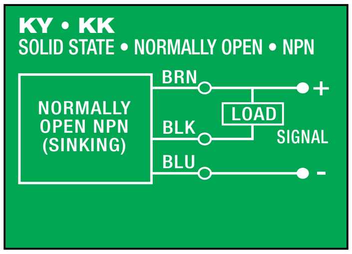

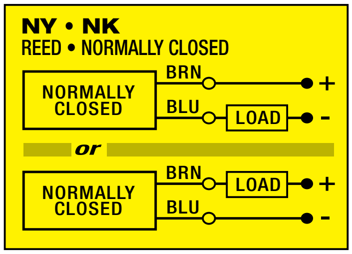

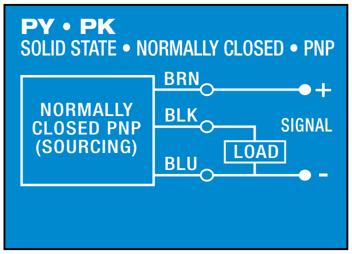

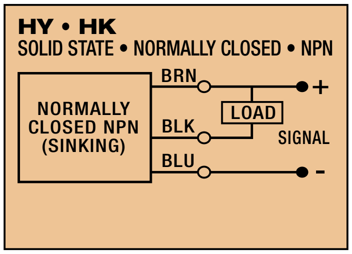

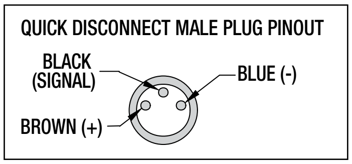

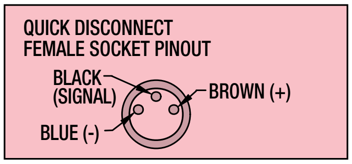

DIMENSIONS

SWITCH DIMENSIONS

☐ **Y** - direct connect

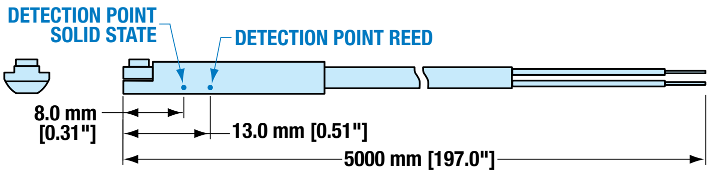

☐ **K** - QD (Quick-disconnect) switch

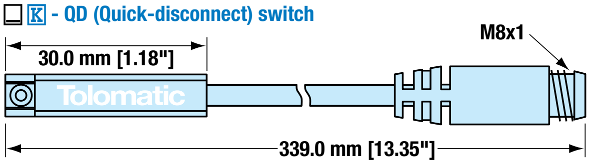

QD Cable

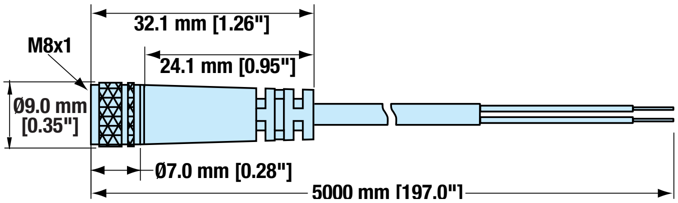

Dimensions in inches [brackets indicate dimensions in millimeters]

MOUNTING DIMENSIONS

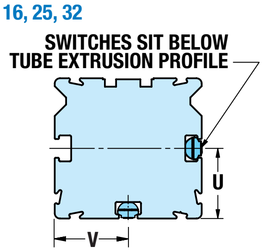

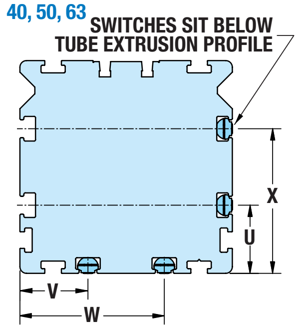

SWITCH MOUNTING

	16	25	32	40	50	63
U	0.31	0.79	1.06	0.81	1.08	1.50
mm	*7.9*	*20.0*	*27.0*	*20.5*	*27.4*	*38.0*
V	0.59	0.83	1.09	0.81	1.08	1.50
mm	*15.0*	*21.0*	*27.7*	*20.5*	*27.4*	*38.0*
W	–	–	–	1.71	2.02	2.44
mm	*–*	*–*	*–*	*43.5*	*51.4*	*62.0*
X	–	–	–	1.71	2.02	2.44
mm	*–*	*–*	*–*	*43.5*	*51.4*	*62.0*

SWITCH INSTALLATION AND REPLACEMENT

Place switch in side groove on tube at desired location with "Tolomatic" facing outward. While applying light pressure to the switch, rotate the switch halfway into the groove. Maintaining light pressure, rotate the switch in the opposite direction until the it is fully inside the groove with "Tolomatic" visible. Re-position the switch to the exact location and lock the switch securely into place by tightening the screw on the switch.

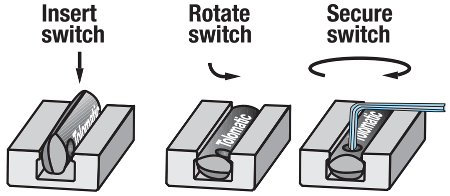

SELECTION GUIDELINES

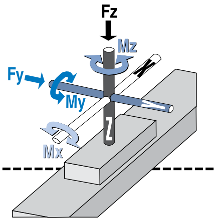

1 COMPILE APPLICATION REQUIREMENTS

APPLICATION DATA WORKSHEET

STROKE LENGTH ______________
☐ inch (S K) (U.S. Standard) ☐ millimeters (S M) (Metric)

AVAILABLE AIR PRESSURE ______
☐ PSI (U.S. Standard) ☐ bar (Metric)

REQUIRED THRUST FORCE ______
☐ lbf (U.S. Standard) ☐ N (Metric)

LOAD ______________________
☐ lb (U.S. Standard) ☐ kg (Metric)

LOAD CENTER OF GRAVITY DISTANCE TO CARRIER CENTER
d_x _______
d_y _______
d_z _______
☐ inch (U.S. Standard) ☐ millimeters (Metric)

FORCES APPLIED TO CARRIER
F_z _______
F_y _______
☐ lbf (U.S. Standard) ☐ N (Metric)

BENDING MOMENTS APPLIED TO CARRIER
M_x _______
M_y _______
M_z _______
☐ in-lbs (U.S. Standard) ☐ N-m (Metric)

FINAL VELOCITY ______________
☐ in/sec (U.S. Standard) ☐ mm/sec (Metric)

MOVE TIME sec. ______________

NO. OF CYCLES ______________
☐ per minute ☐ per hour

ORIENTATION

☐ Horizontal

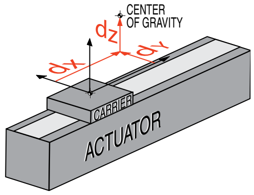

☐ Side

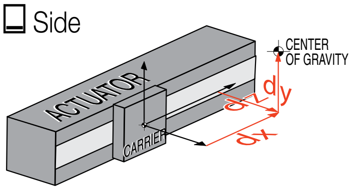

☐ Horizontal Down

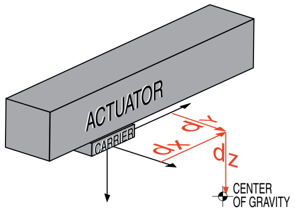

☐ Vertical

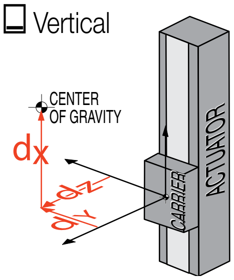

☐ Angled α ________ β ________

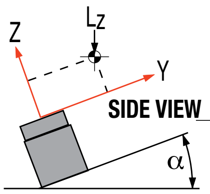

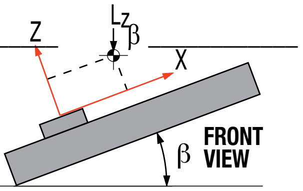

OTHER ISSUES:
(i.e. Environment, Temperature, Contamination, etc.) ______________

Contact information: ______________

Fax (1-763-478-8080) or call Tolomatic (1-800-328-2174) with the above information. We will provide any assistance needed to determine the proper MXP Band Cylinder.

The process of selecting a load bearing actuator for a given application can be complex. It is highly recommended that you contact Tolomatic for assistance in selecting the best actuator for your application. The following overview of the selection guidelines are for educational purposes only.

2 DETERMINE BORE SIZE

- Consult the Theoretical Force vs. Pressure graph. (See graph at right)
- Find the intersection of the available pressure and required thrust force. If the intersection falls below the plotted bore size curve, the actuator will supply adequate force for the application. If the intersection is above the curve, a larger cylinder bore size will be required.

⚠ NOTE: Additional force may be required to obtain the necessary acceleration within desired cycle time.

3 COMPARE LOAD TO MAXIMUM LOAD CAPACITIES

Calculate the following static loads: Mx, My, Mz, Fy, Fz

Loads = Applied Moments + Forces

If the load of your application exceeds figures indicated in the MOMENT AND LOAD CAPACITY tables (See pages MXP_14-19) consider:

1.) Higher capacity bearing style, i.e. N to S, S to P

2.) Larger Bore Cylinder

3.) Auxiliary Carrier

4.) Add External Guides

4 CALCULATE LOAD FACTOR L_F

For combined loads the Load Factor (L_F) must not exceed the value 1.

$$L_F = \frac{Mx}{Mx_{max}} + \frac{My}{My_{max}} + \frac{Mz}{Mz_{max}} + \frac{Fy}{Fy_{max}} + \frac{Fz}{Fz_{max}} \leq 1$$

If L_F exceeds the value 1, then consider the four choices listed in step #3.

THEORETICAL FORCE VS PRESSURE

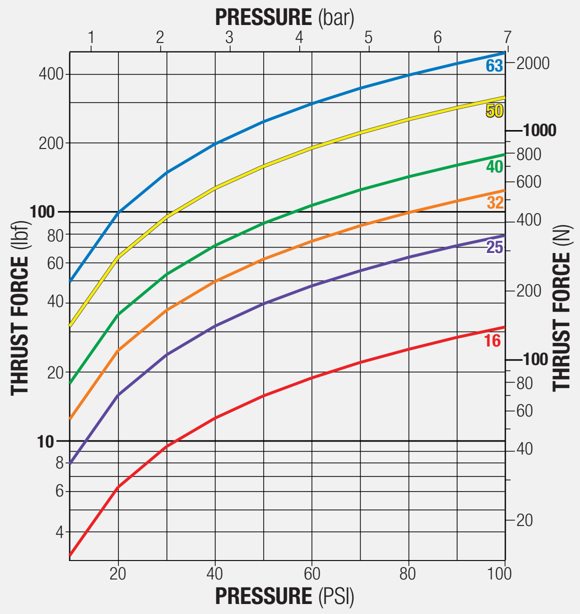

5 DETERMINE CUSHION & SHOCK CAPACITY

Consult the Cushion and Shock Absorber Performance charts for the model selected (see page MXP_22). The velocities listed on the cushion charts are final or impact velocities. If the final or impact velocity is not known, use of valve deceleration circuits or shock absorbers should be considered.

CUSHIONS

Find the intersection of the final velocity and load mass. If the intersection is below the diagonal lines, the internal cushions on the actuator may be used.

SHOCKS

If the intersection of the final velocity and load mass falls in the shaded regions, then shock absorbers should be used.

6 CONSIDER PEAK DYNAMIC INERTIA MOMENTS

When a rigidly attached load mass is accelerated or decelerated, its inertia induces bending moments on the carrier. The magnitude of these inertia moments can be larger than the applied loads. Careful attention to how the load is decelerated at the end of stroke is required for extended actuator performance and application safety.

Evaluate the dynamic inertia moment data:

1.) The length of deceleration distance

2.) The load attached to the carrier

3.) The distance of the load mass center of gravity from the carrier, and

4.) The final velocity of the carrier.

If dynamic inertia moments are excessive, consider the four choices listed in step #3 or consider these deceleration methods:

- Reduce final velocity with flow controls or reduced pressure.
- Pneumatic valve deceleration circuits. By reducing the speed before the cushion or shock is reached, the load can decelerate over a longer distance, thereby reducing the deceleration moments.
- Position shock absorbers at the load's center of gravity. This will greatly reduce the moment load applied to the carrier.

P PROFILED RAIL DECELERATION CONSIDERATIONS

While the P Profiled Rail MXP is capable of carrying very large loads, consideration must be given to how to stop the load at the end of stroke. If Tolomatic cushions or shocks are used, stay within the specifications defined. If another type of shock absorber is used, be sure that the deceleration of the load is smooth and over an adequate distance.

7 DETERMINE TUBE CLAMP REQUIREMENTS

- Consult the Tube Clamp Requirement chart for the model selected (page MXP_23-24).
- Cross-reference the load force and maximum distance between supports.
- Divide stroke length by max. distance calculated above to determine number of tube clamps to order.

8 CONSIDER PORTING AND OPTIONS

- Choose Single End Porting or Dual End Porting
- Choose NPT, Metric Parallel *(ISO-G/BSP)* or Metric Taper *(Rc/BST)* Ports

OPTIONS:

- Switches – Reed, Solid State PNP or NPN, all available normally open or normally closed
- Shock Absorbers – Heavy or light duty, fixed or adjustable mount – recommended for longer life in most applications
- Foot Mounts
- Floating Mount Bracket – used when lack of parallelism occurs between the cylinder and an externally guided and supported load. Available for N internal & S solid bearing styles

S SOLID BEARING 2:1 RULE

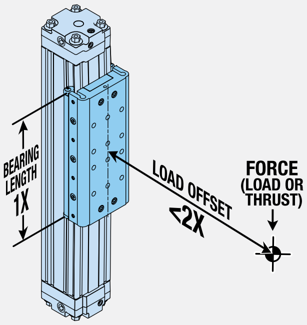

For applications using S solid bearings, binding or interrupted motion may occur if the load offset is equal to or greater than twice the bearing length (1X). *LOAD OFFSET is defined as: the distance from the applied force (or the load center of gravity) to the centerline of the carrier.*

If the load offset cannot be changed consider:

1.) Higher capacity bearing style, i.e. S to P

2.) Larger Bore Cylinder

3.) Auxiliary Carrier

4.) Add External Guides

ADJUSTMENT PROCEDURES

CUSHION NEEDLE ADJUSTMENT

Adjust the cushion needle in the cylinder heads carefully to obtain proper deceleration for your particular application. Proper cushion needle adjustment is achieved when the carrier reaches the end of travel at a velocity approaching zero. If the carrier reaches the end of stroke at velocity, then the cushion needs to be increased by turning the cushion needle screw clockwise. If the carrier stalls or bounces (quickly oscillating directions) before it reaches the end of stroke, then the cushion needs to be decreased by turning the cushion needle screw counterclockwise. Improper cushion adjustment may cause premature failure of the actuator. Call Tolomatic with any questions.

S SOLID BEARING CARRIER ADJUSTMENT

The S solid bearing carrier will provide for maximum life when properly adjusted. The carrier design contains both tension and lock screws. The tension screws control the amount of pressure placed on the carrier bearings. The lock screws lock the tension screws in place and provide fine adjustment of the carrier bearings. The number of tension and lock screws will vary depending on the bore size of the actuator.

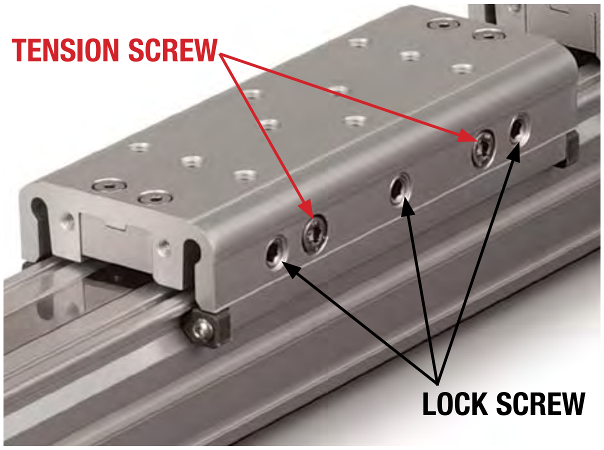

1. Fully loosen all tension and lock screws. They do not need to be removed, just fully loosened.
2. Tighten tension screws on both sides of carrier roughly 1/8 to 1/4 turn clockwise past where the screw starts to feel snug. The carrier should be very difficult or impossible to move by hand.
3. Next, adjust the lock screws on both sides of the carrier roughly 1/8 to 1/4 turn clockwise past where the screw starts to engage.
4. Ideal carrier tension is achieved when the carrier feels snug in relation to the tube. No rocking motion should be present. The carrier should be loose enough to be moved by hand over the entire length of the actuator. If after this process the carrier has become too loose, equally adjust all of the lock screws with a slight 1/32 turn counterclockwise. A carrier that is adjusted too tight will increase the breakaway pressure required for motion; in extreme cases no motion will occur when air is applied.

During the service life, this process may need to be repeated. Keeping the carrier properly adjusted will prolong the life of the S solid bearing system.

MXP16

NOTE: MXP16S requires a different carrier adjustment procedure, see below.

Tools Required:

Inch Models: 1/16 inch and 2.5mm Hex Wrench (Key)
Metric Models: 2 and 2.5 mm Hex Wrench (Key)

1. Loosen endplate screws on both ends of the carrier.
2. Fully loosen all tension and lock screws. They do not need to be removed, just fully loosened.

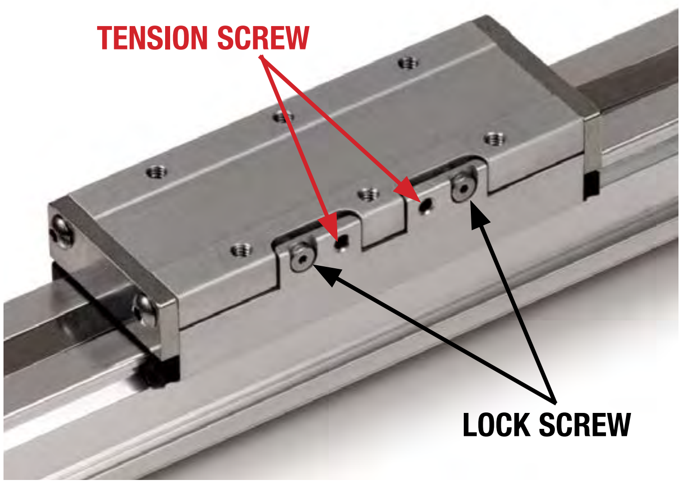

3. Tighten tension screws by turning them clockwise until the carrier is just tight enough so that no side-to-side rocking motion is present and it can easily be moved by hand over the entire stroke length with no hesitation. Very little torque on the screws is required to obtain this condition.

Note: The Tension Screws are the small set screw style fastener. The Lock Screws are the larger, low head, hex drive screws.

4. Tighten lock screws by turning them clockwise until tight. The carrier should feel snug in relation to the tube, with no side-to-side rocking motion present. If the carrier becomes too loose, loosen the lock screws, tighten the tension screws and then retighten the lock screws.
5. Once ideal carrier tension is achieved, fully tighten end plate screws on both ends of the carrier.

Allen wrench sizes for carrier adjustment, Solid bearing actuators

	Tension Screw		Lock Screw	
	in	*mm*	in	*mm*
16	1/16	*2*	1/16	*2*
25	5/32	*4*	1/8	*3*
32	5/32	*4*	3/32	*2*
40	5/32	*4*	1/8	*3*
50	3/16	*4*	3/32	*2.5*
63	1/4	*5*	3/16	*5*

SERVICE PARTS

REPAIR KITS

Repair kit includes: dust band, seal band, end caps, internal soft seals (piston seals, cushion seals, wipers), [Also for S style: bearings and bearing caps]

The part number for a repair kit begins with RK followed by model, bore size, bearing type, and stroke length (SK = inch/US Standard, SM = metric) (NOTE: If unit has an auxiliary carrier also include DW and distance between carrier centers)

Repair Kit ordering method: RK MXP _ _ _ S _ _ _ _ _ _ _ _ DW _ _ _ _ _

EXAMPLE: RK MXP 40 S SM2007·02 DW215·9

Repair Kit – Model – Bore Size – Bearing Type – Stroke Length – Auxiliary Carrier Length

SWITCHES

TO ORDER SERVICE PARTS SWITCHES:

Switches for MXP include retained mounting hardware and are the same for all bore sizes and bearing styles

Code		Lead	Normally	Sensor Type
RY	🟥	5m (197 in)	Open	Reed
RK	🟥	Quick-disconnect		
NY	🟨	5m (197 in)	Closed	Reed
NK	🟨	Quick-disconnect		
TY	⬜	5m (197 in)	Open	Solid State PNP
TK	⬜	Quick-disconnect		
KY	🟩	5m (197 in)	Open	Solid State NPN
KK	🟩	Quick-disconnect		
PY	🟦	5m (197 in)	Closed	Solid State PNP
PK	🟦	Quick-disconnect		
HY	🟫	5m (197 in)	Closed	Solid State NPN
HK	🟫	Quick-disconnect		

Switch ordering method*: SW MXP _ _ _ _ _ _

EXAMPLE: SW MXP 25 N RK 2

Switch Kit – Model – Bore Size – Bearing Type – Switch Type – Quantity

*will include mating female QD cable if required

SERVICE PARTS MXP16, MXP25, MXP32

MOUNTING OPTIONS		16			25			32		
		N Internal	S Solid	P Profiled Rail	N Internal	S Solid	P Profiled Rail	N Internal	S Solid	P Profiled Rail
Foot Mount (1 bracket, 2 bolts)	Inch	8116-9519	8116-9519	8116-9519	8125-9519	8125-9519	8125-9519	8132-9519	8132-9519	8132-9519
	Metric	*8116-9019*	*8116-9019*	*8116-9019*	*8125-9019*	*8125-9019*	*8125-9019*	*8132-9019*	*8132-9019*	*8132-9019*
Tube Clamp (2 clamps)		NA	NA	NA	8125-9018	8125-9018	8125-9018	8132-9018	8132-9018	8132-9018
Floating Mount (brackets, pin, mounting fasteners)	Inch	8116-9535	8116-9536	NA	8125-9535	8125-9536	NA	8132-9535	8132-9536	NA
	Metric	*8116-9035*	*8116-9036*	*NA*	*8125-9035*	*8125-9036*	*NA*	*8132-9035*	*8132-9036*	*NA*
Mounting Plate (1 plate, 2 bolts)	Inch	8316-9016	8316-9016	8316-9016						
	Metric	*8316-9016*	*8316-9016*	*8316-9016*						

SHOCK ABSORBER KITS		16			25			32		
		N Internal	S Solid	P Profiled Rail	N Internal	S Solid	P Profiled Rail	N Internal	S Solid	P Profiled Rail
Fixed Shock Absorber Kit - Light Duty (2 shock absorbers, all required hardware)	Inch	8116-9510	8116-9511	8116-9512	8125-9510	8125-9511	8125-9512	8132-9510	8132-9511	8132-9512
	Metric	*8116-9010*	*8116-9011*	*8116-9012*	*8125-9010*	*8125-9011*	*8125-9012*	*8132-9010*	*8132-9011*	*8132-9012*
Fixed Shock Absorber Kit - Heavy Duty (2 shock absorbers, all required hardware)	Inch	8116-9525	8116-9526	8116-9527	8125-9525	8125-9526	8125-9527	8132-9525	8132-9526	8132-9527
	Metric	*8116-9025*	*8116-9026*	*8116-9027*	*8125-9025*	*8125-9026*	*8125-9027*	*8132-9025*	*8132-9026*	*8132-9027*
***Adjustable Shock Absorber Kit - Light Duty** (2 shock absorbers, all required hardware)	Inch	8116-9515	8116-9016	8116-9517	8125-9515	8125-9016	8125-9517	8132-9515	8132-9016	8132-9517
	Metric	*8116-9015*	*8116-9016*	*8125-9017*	*8125-9015*	*8125-9016*	*8125-9017*	*8132-9015*	*8132-9016*	*8132-9017*
***Adjustable Shock Absorber Kit - Heavy Duty** (2 shock absorbers, all required hardware)	Inch	8116-9530	8116-9031	8116-9032	8125-9530	8125-9031	8125-9532	8132-9530	8132-9031	8132-9532
	Metric	*8116-9030*	*8116-9031*	*8116-9032*	*8125-9030*	*8125-9031*	*8125-9032*	*8132-9030*	*8132-9031*	*8132-9032*

SHOCK PARTS		16			25			32		
		N Internal	S Solid	P Profiled Rail	N Internal	S Solid	P Profiled Rail	N Internal	S Solid	P Profiled Rail
Fixed Shock Absorber Mounting Hardware (1 shock mount)	Inch	8116-9520	8116-9520	8116-9522	8125-9520	8125-9520	8125-9522	8132-9520	8132-9520	8132-9522
	Metric	*8116-9020*	*8116-9020*	*8116-9022*	*8125-9020*	*8125-9020*	*8125-9022*	*8132-9020*	*8132-9020*	*8132-9022*
***Adj. Shock Absorber Mounting Hardware** (1 shock mount)		8116-9023	8116-9023	8116-9024	8125-9023	8125-9023	8125-9024	8132-9023	8132-9023	8132-9024
Shock Stop Kit (Hardware needed for shock to strike carrier)	Inch	8116-9521	NA	8116-9034	8125-9521	8125-9013	8125-9534	8132-9521	4912-1063	8132-9534
	Metric	*8116-9021*	*NA*	*8116-9034*	*8125-9021*	*8125-9013*	*8125-9034*	*8132-9021*	*4912-1063*	*8132-9034*
Shock Absorber - Heavy Duty (1 shock absorber)		7906-1066	7906-1066	7906-1066	4910-1338	4910-1338	4910-1338	4912-1068	4912-1068	4912-1068
Shock Absorber - Light Duty (1 shock absorber)		7906-1065	7906-1065	7906-1065	4910-1337	4910-1337	4910-1337	4912-1067	4912-1067	4912-1067

*NOTE: N Internal bearing: Adjustable shock absorbers will decrease actuator stroke, see ⚠ Stroke Adder note on page MXP_29 for more information.
S Solid bearing: Adjustable shock absorbers will decrease actuator stroke, see ⚠ Stroke Adder note on page MXP_34 for more information.
P Profiled rail: Adjustable shock absorbers will decrease actuator stroke, see ⚠ Stroke Adder note on page MXP_39 for more information.

SERVICE PARTS MXP40, MXP50, MXP63

MOUNTING OPTIONS		40			50			63		
		N Internal	S Solid	P Profiled Rail	N Internal	S Solid	P Profiled Rail	N Internal	S Solid	P Profiled Rail
Foot Mount (1 bracket, 2 bolts)	Inch	8140-9519	8140-9519	8140-9519	8150-9519	8150-9519	8150-9519	8163-9519	8163-9519	8163-9519
	Metric	*8140-9019*	*8140-9019*	*8140-9019*	*8150-9019*	*8150-9019*	*8150-9019*	*8163-9019*	*8163-9019*	*8163-9019*
Tube Clamp (2 clamps)		8140-9018	8140-9018	8140-9018	8140-9018	8140-9018	8140-9018	8163-9018	8163-9018	8163-9018
Floating Mount (brackets, pin, mounting fasteners)	Inch	8140-9535	8140-9536	NA	8150-9535	8150-9536	NA	8163-9535	8163-9536	NA
	Metric	*8140-9035*	*8140-9036*	*NA*	*8150-9035*	*8150-9036*	*NA*	*8163-9035*	*8163-9036*	*NA*

SHOCK ABSORBER KITS		40			50			63		
		N Internal	S Solid	P Profiled Rail	N Internal	S Solid	P Profiled Rail	N Internal	S Solid	P Profiled Rail
Fixed Shock Absorber Kit - Light Duty (2 shock absorbers, all required hardware)	Inch	8140-9510	8140-9511	8140-9512	8150-9510	8150-9511	8150-9512	8163-9510	8163-9511	8163-9512
	Metric	*8140-9010*	*8140-9011*	*8140-9012*	*8150-9010*	*8150-9011*	*8150-9012*	*8163-9010*	*8163-9011*	*8163-9012*
Fixed Shock Absorber Kit - Heavy Duty (2 shock absorbers, all required hardware)	Inch	8140-9525	8140-9526	8140-9527	8150-9525	8150-9526	8150-9527	8163-9525	8163-9526	8163-9527
	Metric	*8140-9025*	*8140-9026*	*8140-9027*	*8150-9025*	*8150-9026*	*8150-9027*	*8163-9025*	*8163-9026*	*8163-9027*
***Adjustable Shock Absorber Kit - Light Duty** (2 shock absorbers, all required hardware)	Inch	8140-9515	8140-9016	8140-9517	8150-9515	8150-9016	8150-9517	8163-9515	8163-9016	8163-9517
	Metric	*8140-9015*	*8140-9016*	*8140-9017*	*8150-9015*	*8150-9016*	*8150-9017*	*8163-9015*	*8163-9016*	*8163-9017*
***Adjustable Shock Absorber Kit - Heavy Duty** (2 shock absorbers, all required hardware)	Inch	8140-9530	8140-9031	8140-9532	8150-9530	8150-9031	8150-9532	8163-9530	8163-9031	8163-9532
	Metric	*8140-9030*	*8140-9031*	*8140-9032*	*8150-9030*	*8150-9031*	*8150-9032*	*8163-9030*	*8163-9031*	*8163-9032*

SHOCK PARTS		40			50			63		
		N Internal	S Solid	P Profiled Rail	N Internal	S Solid	P Profiled Rail	N Internal	S Solid	P Profiled Rail
Fixed Shock Absorber Mounting Hardware (1 shock mount)	Inch	8140-9520	8140-9520	8140-9520	8150-9520	8150-9520	8150-9522	8163-9520	8163-9520	8163-9520
	Metric	*8140-9020*	*8140-9020*	*8140-9020*	*8150-9020*	*8150-9020*	*8150-9022*	*8163-9020*	*8163-9020*	*8163-9020*
***Adj. Shock Absorber Mounting Hardware** (1 shock mount)		8140-9023	8140-9023	8140-9024	8150-9023	8150-9023	8163-9024	8163-9023	8163-9023	8163-9024
Shock Stop Kit (Hardware needed for shock to strike carrier)	Inch	8140-9521	4912-1063	8140-9534	8150-9521	4415-1003	8150-9034	8163-9521	4915-1003	8150-9034
	Metric	*8140-9021*	*4912-1063*	*8140-9034*	*8150-9021*	*4415-1003*	*8150-9034*	*8163-9021*	*4915-1003*	*8150-9034*
Shock Absorber - Heavy Duty (1 shock absorber)		4912-1068	4912-1068	4912-1068	4920-1069	4920-1069	4920-1069	4920-1069	4920-1069	4920-1069
Shock Absorber - Light Duty (1 shock absorber)		4912-1067	4912-1067	4912-1067	4920-1068	4920-1068	4920-1068	4920-1068	4920-1068	4920 -1068

*NOTE: N Internal bearing: Adjustable shock absorbers will decrease actuator stroke, see ⚠ Stroke Adder note on page MXP_29 for more information.
S Solid bearing: Adjustable shock absorbers will decrease actuator stroke, see ⚠ Stroke Adder note on page MXP_34 for more information.
P Profiled rail: Adjustable shock absorbers will decrease actuator stroke, see ⚠ Stroke Adder note on page MXP_39 for more information.

ORDERING

MODEL SELECTION (MUST BE IN THIS ORDER)

MXP 40 P SN SM2007.02

OPTIONS (IN ANY ORDER)

DW215.9 FM2 TC8 TK2 AH2 _ _ _

ABT
MXP
BC2
BC3
BC4
LS
MG
CC
PB
ENGR

MODEL

MXP	MXP Pneumatic Band Cylinder

BORE

16	16 mm (${}^{5}/_{8}$-inch) bore
25	25 mm (1-inch) bore
32	32 mm (1 ${}^{1}/_{4}$-inch) bore
40	38 mm (1 ${}^{1}/_{2}$-inch) bore
50	50 mm (2-inch) bore
63	64 mm (2 ${}^{1}/_{2}$-inch) bore

BEARING

N	Internal Bearing
S	Solid Bearing
P	Profiled Rail

PORTING

TP	Metric Taper (Rc/BST), Dual-end
GP	Metric Parallel (ISO-G/BSP), Dual-end
NP	NPT, Dual-end
ST	Single-end, Metric Taper
SG	Single-end, Metric Parallel
SN	Single-end, NPT

⚠ Single End Porting ST SG SN is not available for MXP16

⚠ Metric Taper Porting TP is not available for MXP16

STROKE LENGTH & MOUNTING TYPE

SK_ _ _._ _ _ Stroke, enter desired stroke length in **inches**

SM_ _ _ _ _._ _ _ Stroke, enter desired stroke length in **millimeters**

NOTE: Actuator mounting threads and mounting fasteners will be either inch or metric; depending on how stroke length is indicated

SK=inch mounting

SM= metric mounting

AUXILIARY CARRIER

DW_ _ _._ _ _ Auxiliary Carrier, enter center-to-center spacing desired in **inches** (SK) or **millimeters** (SM)

(Same unit of measure as stroke length is required)

⚠ **Center-to-center spacing between carriers adds to overall length of the actuator,** this distance will not be subtracted from stroke length specified in the previous step

MOUNTING

FM _	Foot Mount, enter quantity desired
TC_	Tube Clamps, enter number of pairs (Not available on MXP16)
MP_	Mounting Plate (includes T-Nuts) for MXP16 ONLY
FL	Floating Mount

⚠ NOTE: Floating Mount is not available with "P" Profiled Rail

⚠ NOTE: Shock Absorbers are not available with Floating Mount

SWITCHES

RY_	Reed Switch (Normally Open) with 5-meter lead, & enter quantity desired
RK_	Reed Switch (Normally Open) with 5-meter lead/QD, & quantity
NY_	Reed Switch (Normally Closed) with 5-meter lead, & quantity
NK_	Reed Switch (Normally Closed) with 5-meter lead/QD, & quantity
TY_	Solid State Switch PNP (Normally Open) w/ 5-meter lead, & quantity
TK_	Solid State Switch PNP (Normally Open) w/ 5-meter lead/QD, & quantity
KY_	Solid State Switch NPN (Normally Open) w/ 5-meter lead, & quantity
KK_	Solid State Switch NPN (Normally Open) w/ 5-meter lead/QD, & quantity
PY_	Solid State Switch PNP (Normally Closed) w/ 5-meter lead, & quantity
PK_	Solid State Switch PNP (Normally Closed) w/ 5-meter lead/QD, & quantity
HY_	Solid State Switch NPN (Normally Closed) w/ 5-meter lead, & quantity
HK_	Solid State Switch NPN (Normally Closed) w/ 5-meter lead/QD, & quantity

SHOCK ABSORBER

SD_	Fixed Shock Hardware & enter quantity desired
SL_	Fixed Shock Light Duty & enter quantity desired
SH_	Fixed Shock Heavy Duty & enter quantity desired
AD_	Adjustable Shock Hardware & enter quantity desired
AL_	Adjustable Shock Light Duty & enter quantity desired
AH_	Adjustable Shock Heavy Duty & enter quantity desired

⚠ NOTE: Adjustable Shock Absorbers reduce usable stroke length of the actuator. Please see the following pages for required stroke adder.

N Internal Bearing.....pg. MXP_29
S Solid Bearing.........pg. MXP_34
P Profiled Rail ....pg. MXP_39

⚠ NOTE: Floating Mount is not available with Shock Absorbers

VISIT WWW.TOLOMATIC.COM/MXP FOR COMPLETE, UP-TO-DATE INFORMATION

⚠ *Not all codes listed are compatible with all options.*

Call Tolomatic to determine available options and accessories based on your application requirements.

Tolomatic™
EXCELLENCE IN MOTION

BC2 SOLID BEARING RODLESS CYLINDER

CONTENTS

BC2 BAND CYLINDER

ENDURANCE TECHNOLOGY℠

A Tolomatic Design Principle

Endurance Technology features are designed for maximum durability to provide extended service life.

The BC2 is the direct descendent of the industry's first pneumatic rodless cylinder, manufactured by Tolomatic, the number one rodless supplier. Featuring durable stainless steel bands, field replaceable engineered bearings and a large carrier mounting pattern the BC2 is a great solution for applications that require increased Mx bending moment capacity. Built-to-order in stroke lengths up to 350 inches.

FORMED STEEL PISTON BRACKET

- Provides maximum strength at major stress points
- Heat treated carbon steel withstands the toughest dynamic forces
- Strongest bracket design in the industry assures long life with less maintenance

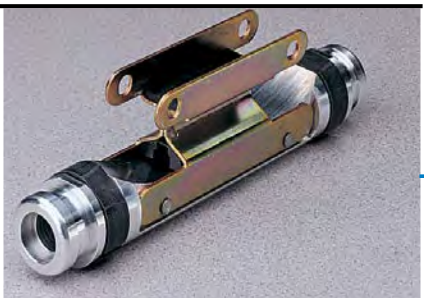

STAINLESS STEEL SEALING BAND SYSTEM

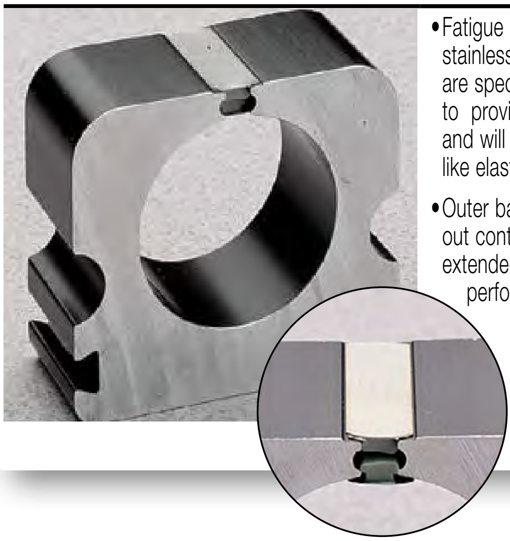

- Fatigue resistant stainless steel bands are specifically made to provide longer life and will not elongate, like elastomers
- Outer band keeps out contaminants for extended performance
- Inner band provides a smooth surface for less seal wear

FORMED END CAP WIPER SEAL

- Keeps contaminants from entering the sealing area
- Protects internal components
- Reduces maintenance while increasing productivity

ADJUSTABLE CUSHIONS

- Adjustable cushions are standard, not optional
- Easy screw adjustment for end-of-stroke deceleration
- Protects actuator and load from damage

TOLOMATIC…THE RODLESS CYLINDER LEADER

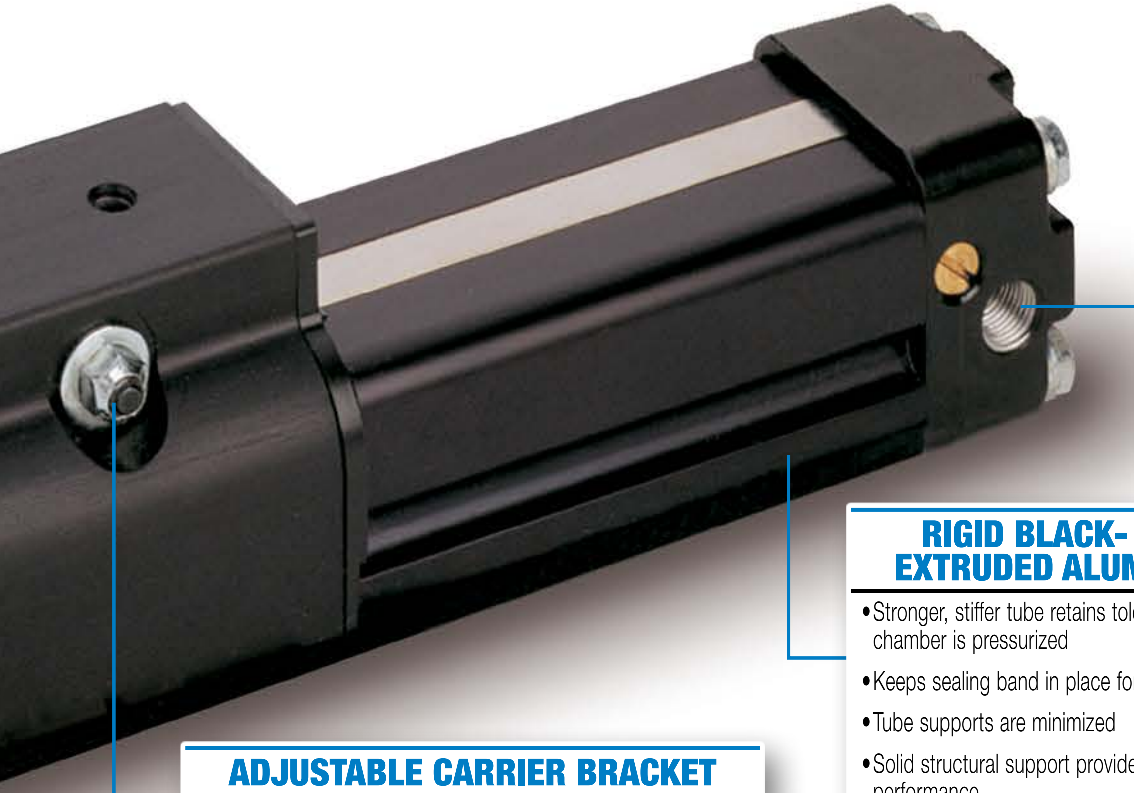

3-PORTED HEADS

- Standard feature
- Simplifies air connections

RIGID BLACK- ANODIZED EXTRUDED ALUMINUM TUBE

- Stronger, stiffer tube retains tolerance specs when chamber is pressurized
- Keeps sealing band in place for maximized air efficiency
- Tube supports are minimized
- Solid structural support provides durability and long life performance

ADJUSTABLE CARRIER BRACKET

- 2-bolt adjustment instead of a series of set screws
- Easy to set tension for freer running or stiffer systems
- Minimizes free play while maintaining a higher level of load guidance

LOAD-BEARING CARRIER DESIGN

- Load and piston are independent - piston floats, resulting in less friction and longer seal life
- Engineered resin load bearings offer consistently low friction and long wear

OPTIONS

AUXILIARY CARRIER

- Substantially higher load capacity
- Substantially higher bending moment capacity

FLOATING MOUNT

- Compensates for non-parallelism between band cylinder and externally guided load

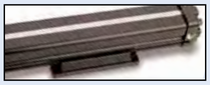

TUBE SUPPORT MOUNTS

- Used for intermediate support

FOOT MOUNTS

- For end mounting of band cylinder

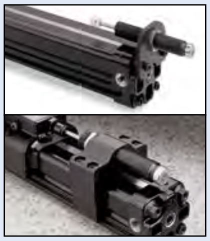

SHOCK ABSORBERS

- Smooth deceleration
- Allows increased operating speed
- Self-compensates for load or speed changes
- Minimizes impact load to equipment
- Higher equipment productivity
- Adjustable position shocks available

SWITCHES

- Available in Reed, Hall-effect and Triac
- 15ft. cable with flying leads; available with quick-disconnect couplers

BC2 Solid Bearing Rodless Cylinder

PERFORMANCE

BC2 BENDING MOMENTS AND LOAD, ALL SIZES

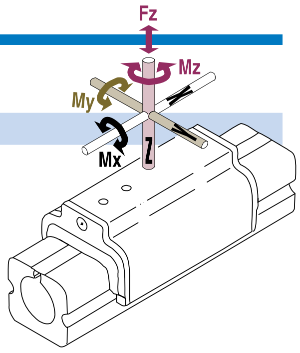

STANDARD ACTUATOR

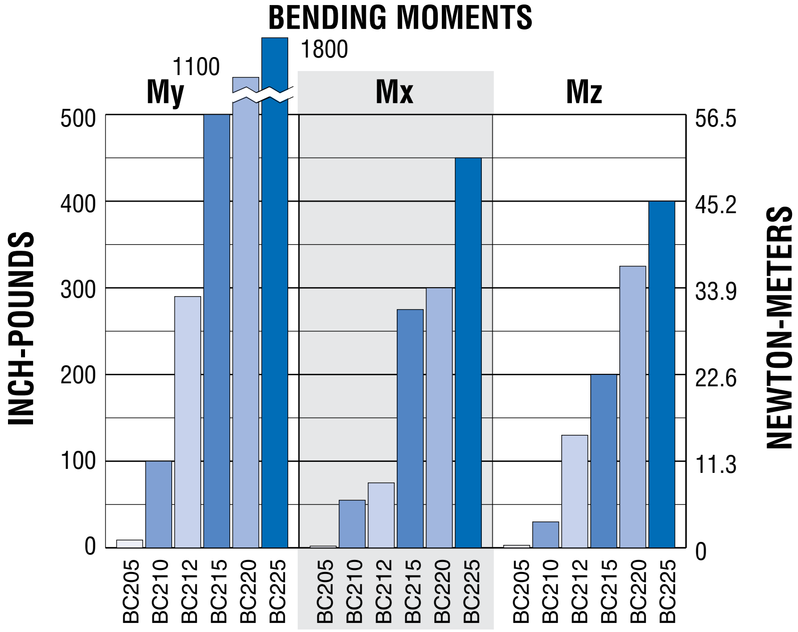

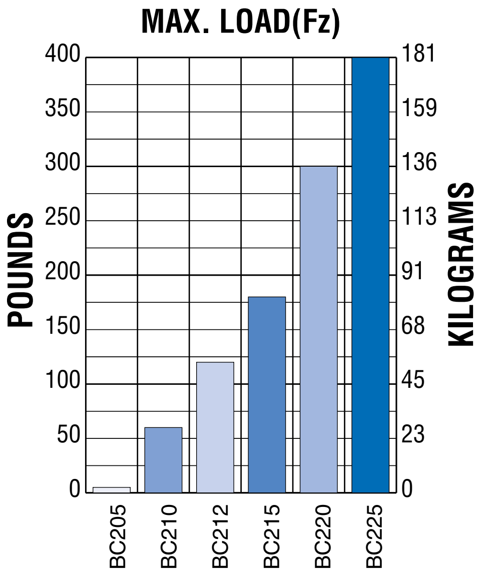

AUXILIARY CARRIER OPTION

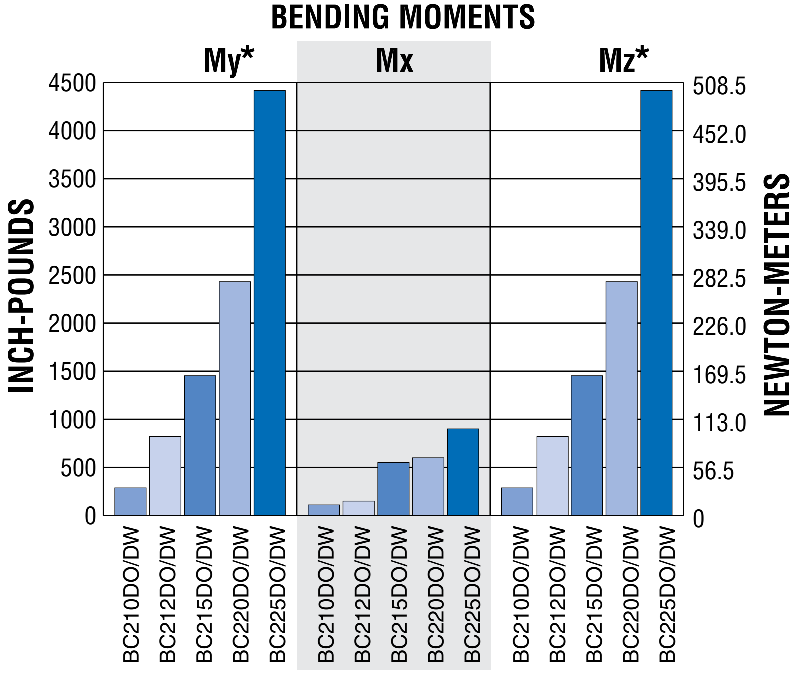

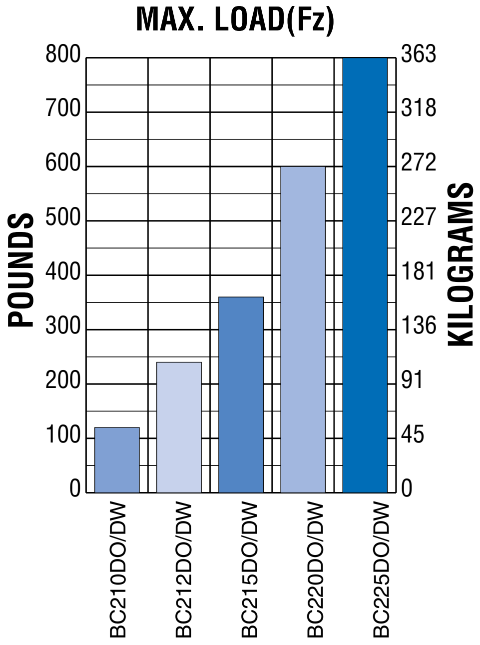

*Auxiliary carrier bending moments indicated are at minimum center to center distance. Additional My + Mz load capacity can be obtained by increasing "D" dimension. Refer to auxiliary carrier data on page BC2_14.

BC2 Solid Bearing Rodless Cylinder

BC2 THEORETICAL FORCE vs PRESSURE

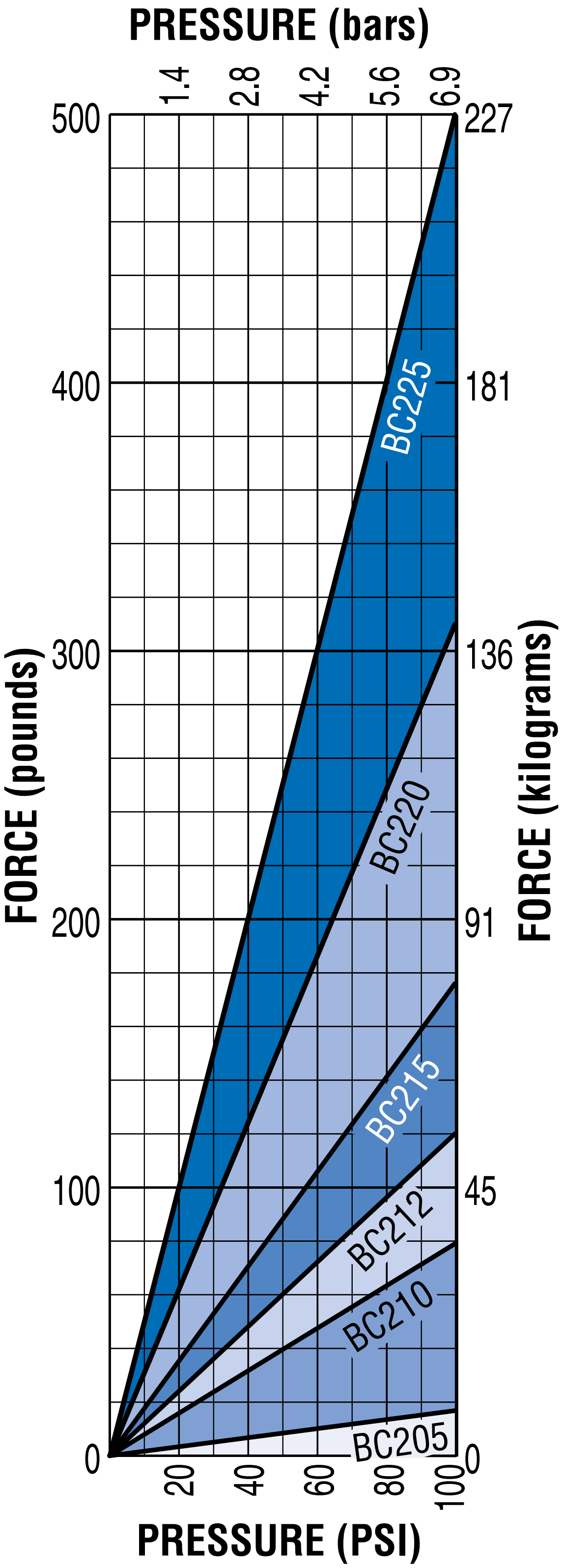

GUIDELINES

BC2 CARRIER BRACKET BOLT ADJUSTMENT

BC2 carrier bracket adjustment bolts should be adjusted to suit each individual application, depending on the degree of rigidity required. A good starting point is to tighten the nut on the bolt until there is no lateral movement of the bolt. Then, equally tighten each nut on the carrier bolt while moving the carrier by hand along the length of the stroke. When all lateral play in the carrier is eliminated and free movement along the length of the stroke is maintained, your carrier bracket is adjusted properly. Some applications may require fine tuning of this adjustment to gain more lateral play or a higher degree of rigidity. In demanding applications, carrier adjustments should be done periodically.

BC205 Solid Bearing Rodless Cylinder

PERFORMANCE

BC205

BC205 OPTIONS	Page
Floating Mount	BC2_18
Foot Mount	BC2_17
Switches	BC2_20
Tube Supports	BC2_16
MORE INFORMATION	**Page**
Application Guidelines	BC2_26
Ordering	BC2_28
Selection	BC2_25

THEORETICAL FORCE vs PRESSURE

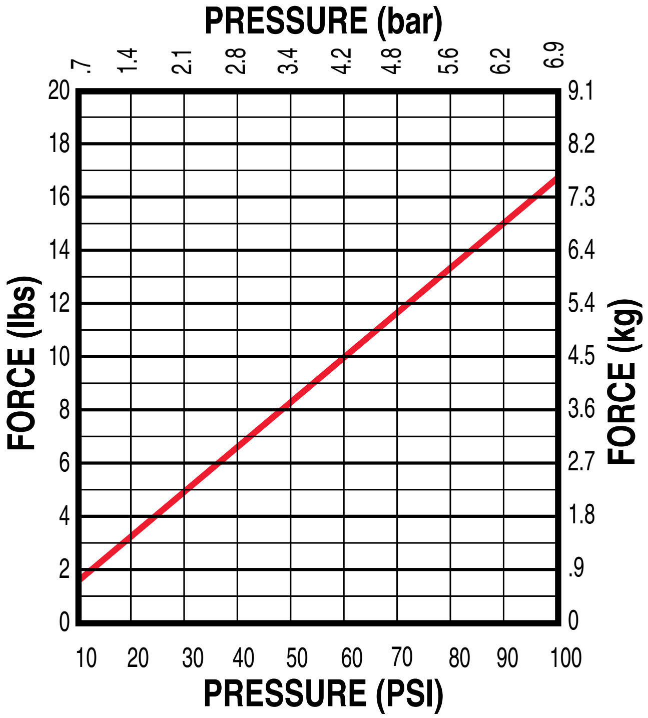

BUMPER DAMPENING

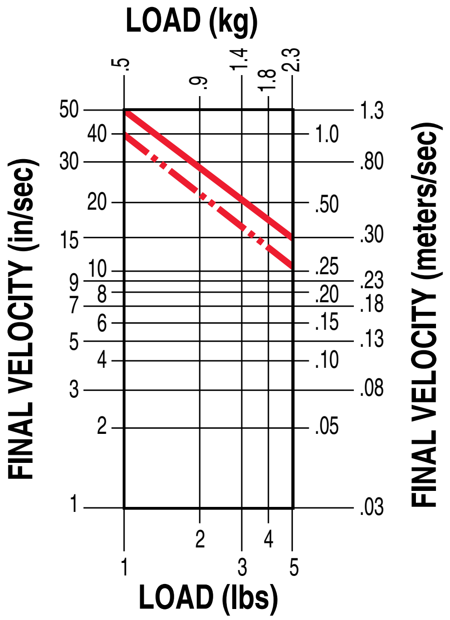

NOTE:

▬	Max. for any application
‒·‒·‒	Max. for continuously cycled application

TUBE SUPPORT REQUIREMENTS

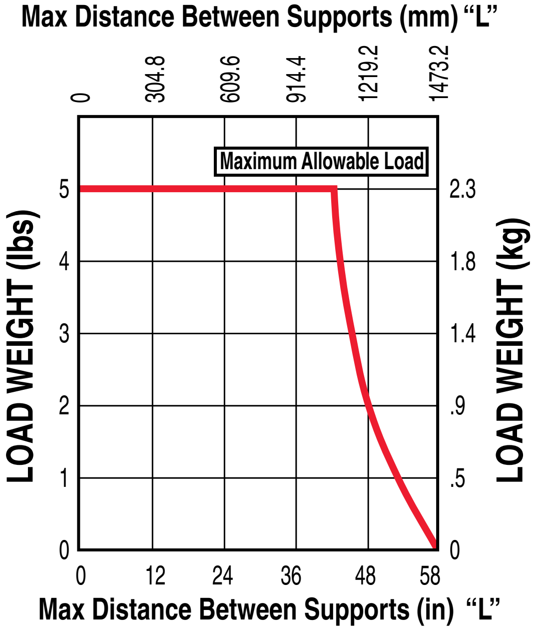

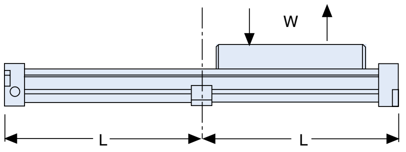

BC205 Solid Bearing Rodless Cylinder

DIMENSIONS

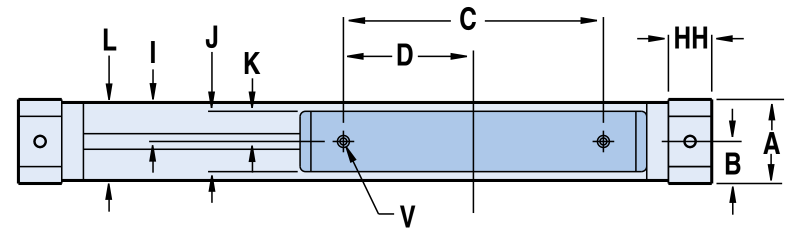

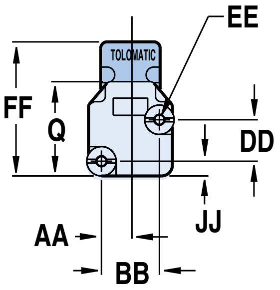

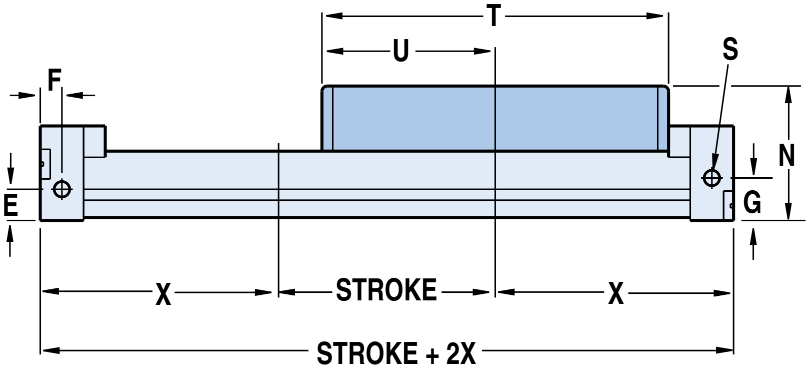

	U.S. Standard	Metric
A	0.97	24.6
B	0.48	12.3
C	3.00	76.2
D	1.50	38.1
E	0.36	9.1
F	0.25	6.35
G	0.49	12.4
I	0.45	11.45
J	0.70	17.8
K	0.35	8.9
L	0.90	22.9
N	1.55	39.4
Q	1.09	27.7
S	**NP** #10-32 UNF	**GP** M5
T	4.00	101.6
U	2.00	50.8
V	2x #6-32 UNC x .38 DEEP	M3 x 9.7 DEEP
X*	2.60 @ 80-100 PSI	66.0 @ 80-100 PSI
	2.66 @ 40-80 PSI	67.6 @ 40-80 PSI
	2.71 @ 0-40 PSI	68.8 @ 0-40 PSI
AA	0.33	8.4
BB	0.66	16.8
DD	0.48	12.2
EE	4x #6-32UNC x .25 DEEP	M3 x 6.4 DEEP
FF	1.55	39.4
HH	0.50	12.7
JJ	0.17	4.3
	INCHES	MILLIMETERS

SPECIFICATIONS

BC205 BENDING MOMENTS AND LOAD

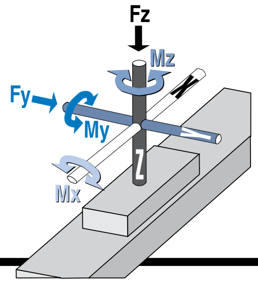

	BORE SIZE	MAX. BENDING MOMENT			MAX. LOAD
		My	Mx	Mz	Fz
U.S.	0.50 in	9.0 in-lbs	2.0 in-lbs	3.0 in-lbs	5.0 lbs
Metric	12 mm	1.01 N-m	0.22 N-m	0.33 N-m	2.27 kg

	BORE SIZE	WEIGHT		MAX. STROKE LENGTH*	MAX. PRESSURE	TEMPERATURE RANGE
		BASE	PER UNIT OF STOKE			
U.S.	0.50 in	0.38 lb	0.036 lb/in	171 in	100 PSI	20° to 140° F
Metric	12 mm	0.169 kg	0.0164 kg/mm	4343 mm	6.895 bar	-7° to 60° C

***For longer strokes, alternate materials, mounting and/or fasteners – consult Tolomatic**

BC210 Solid Bearing Rodless Cylinder

PERFORMANCE

BC210

BC210 OPTIONS	Page
Auxiliary Carrier	BC2_14
Floating Mount	BC2_18
Foot Mount	BC2_17
Shock Absorbers	BC2_22
Switches	BC2_20
Tube Supports	BC2_16
MORE INFORMATION	**Page**
Application Guidelines	BC2_26
Ordering	BC2_28
Selection	BC2_25

THEORETICAL FORCE vs PRESSURE

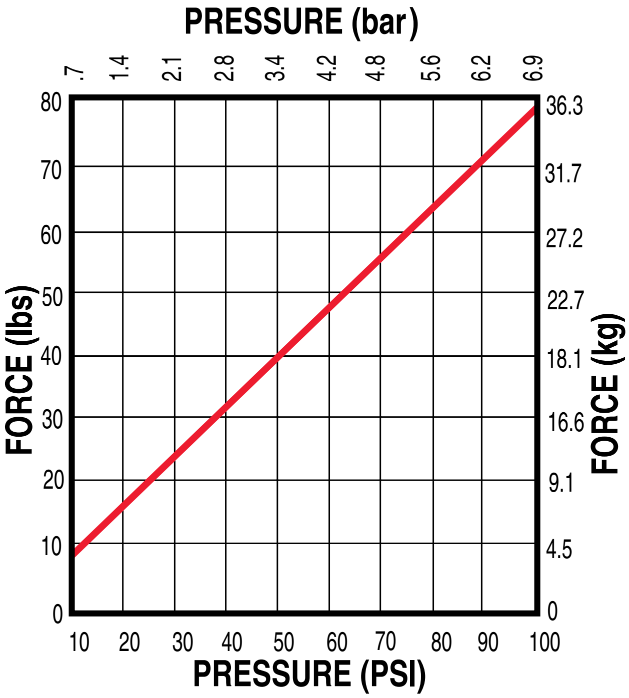

CUSHION DATA

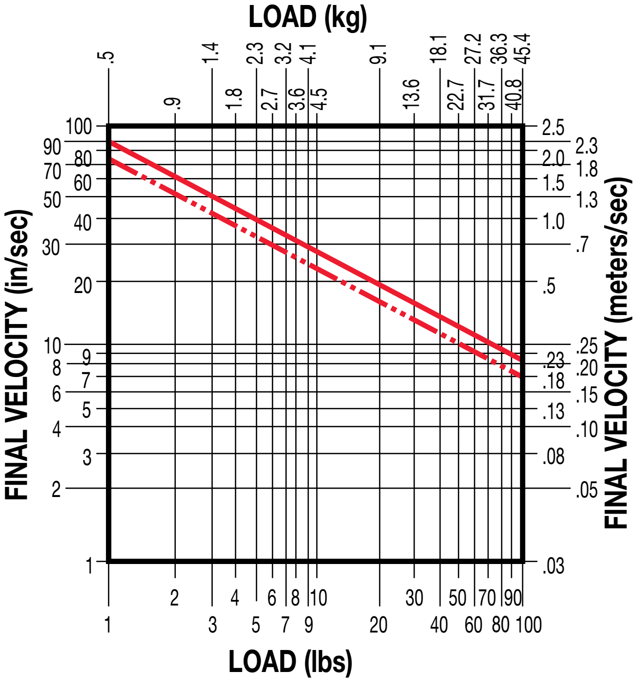

NOTE:
- Max. for any application
- Max. for continuously cycled application

TUBE SUPPORT REQUIREMENTS

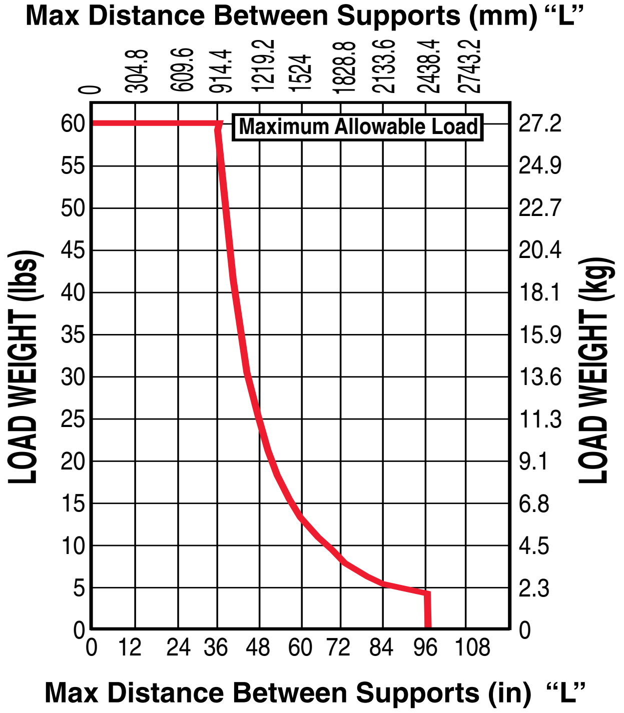

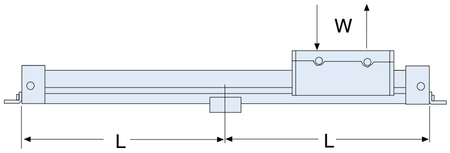

BC210 Solid Bearing Rodless Cylinder

DIMENSIONS

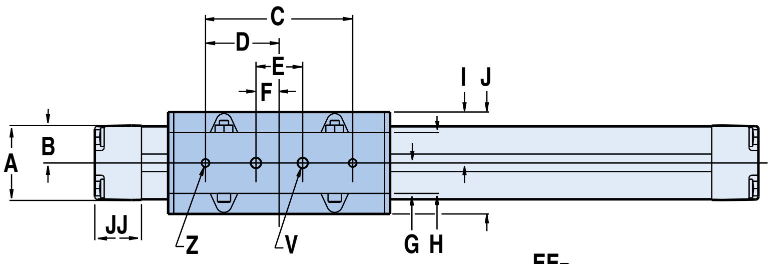

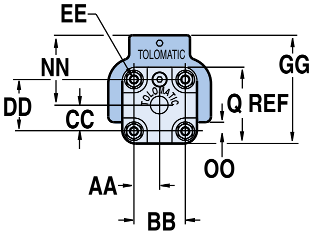

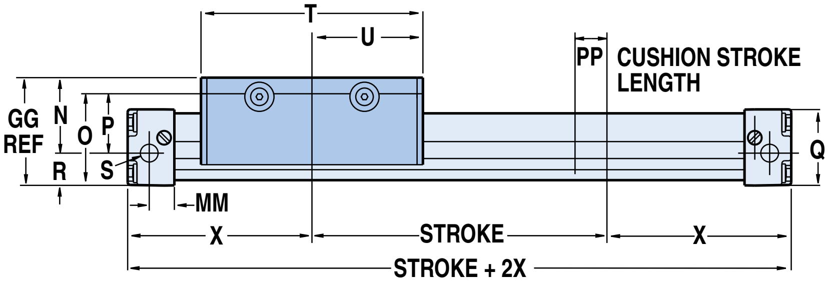

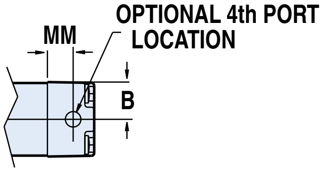

	U.S. Standard	Metric
A	1.58	40.1
B	0.79	20.1
C	3.15	80.0
D	1.57	40.0
E	1.00	25.4
F	0.50	12.7
G	0.65	16.5
H	1.30	33.0
I	1.09	27.7
J	2.18	55.4
N	1.62	41.2
O	1.88	47.7
P	1.20	30.5
Q	1.64	41.5
R	0.68	17.3
S	**NP** 1/8 NPT (3)	**TP** 1/8 BSPT(3) **GP** 1/8 BSPP(3)
T	4.75	120.7
U	2.37	60.2
V	1/4-20 UNC X .25 DEEP	M6 X 6 DEEP
X	3.94	100.1
Z	10-32 UNC X .25 DEEP	M6 X 6 DEEP
AA	0.55	14.0
BB	1.10	27.9
CC	0.55	14.0
DD	1.10	27.9
EE	10-24 X .43 DEEP	M5 X 11.0 DEEP
GG	2.30	58.4
JJ	1.00	25.4
MM	0.55	14.0
NN	1.50	38.1
OO	0.18	4.7
PP	0.68	17.3
	INCHES	MILLIMETERS

SPECIFICATIONS

BC210 BENDING MOMENTS AND LOAD

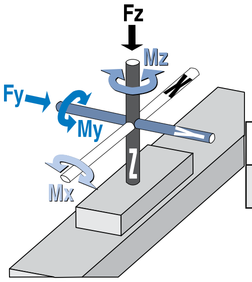

	BORE SIZE	MAX. BENDING MOMENT			MAX. LOAD
		My	Mx	Mz	Fz
U.S.	1.00 in	100 in-lbs	55 in-lbs	30 in-lbs	60 lbs
Metric	25 mm	11.29 N-m	6.21 N-m	3.39 N-m	27.21 kg

	BORE SIZE	WEIGHT		MAX. STROKE LENGTH*	MAX. PRESSURE	TEMPERATURE RANGE
		BASE	PER UNIT OF STOKE			
U.S.	1.00 in	2.26 lbs	0.14 lbs/in	350 in	100 PSI	20° to 140° F
Metric	25 mm	1.025 kg	0.0024 kg/mm	8890 mm	6.895 bar	-7° to 60° C

***For longer strokes, alternate materials, mounting and/or fasteners – consult Tolomatic**

BC212 & BC215 Solid Bearing Rodless Cylinder

PERFORMANCE

🟥 BC212
🟩 BC215

BC212 & BC215

BC212 & BC215 OPTIONS	Page
Auxiliary Carrier	BC2_14
Floating Mount	BC2_18
Foot Mount	BC2_17
Shock Absorbers	BC2_22
Switches	BC2_20
Tube Supports	BC2_16
MORE INFORMATION	**Page**
Application Guidelines	BC2_26
Ordering	BC2_28
Selection	BC2_25

CUSHION DATA

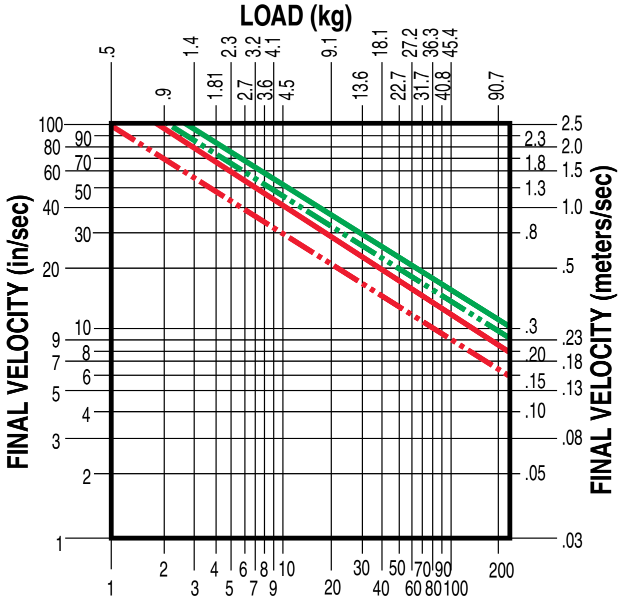

NOTE:
— Max. for any application
—··— Max. for continuously cycled application

THEORETICAL FORCE vs PRESSURE

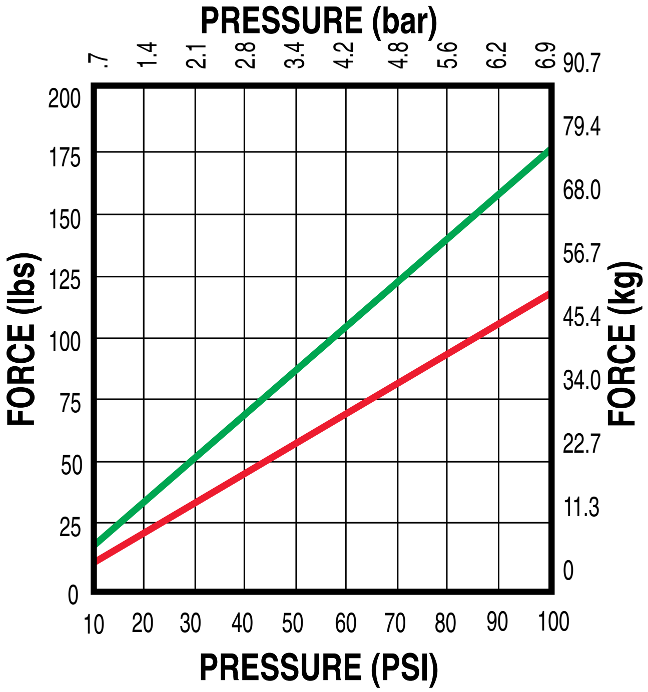

TUBE SUPPORT REQUIREMENTS

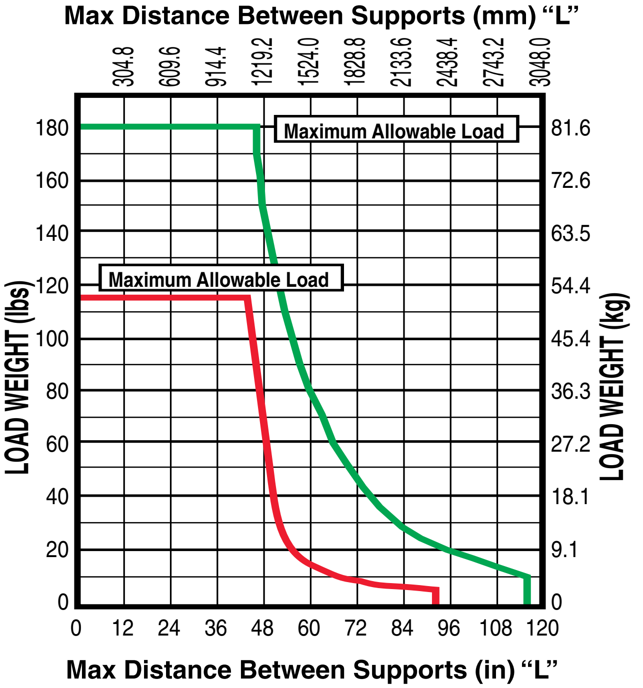

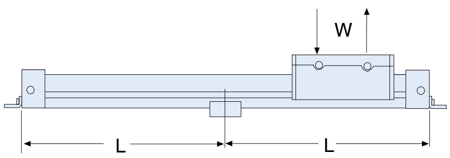

BC212 & BC215 Solid Bearing Rodless Cylinder

DIMENSIONS

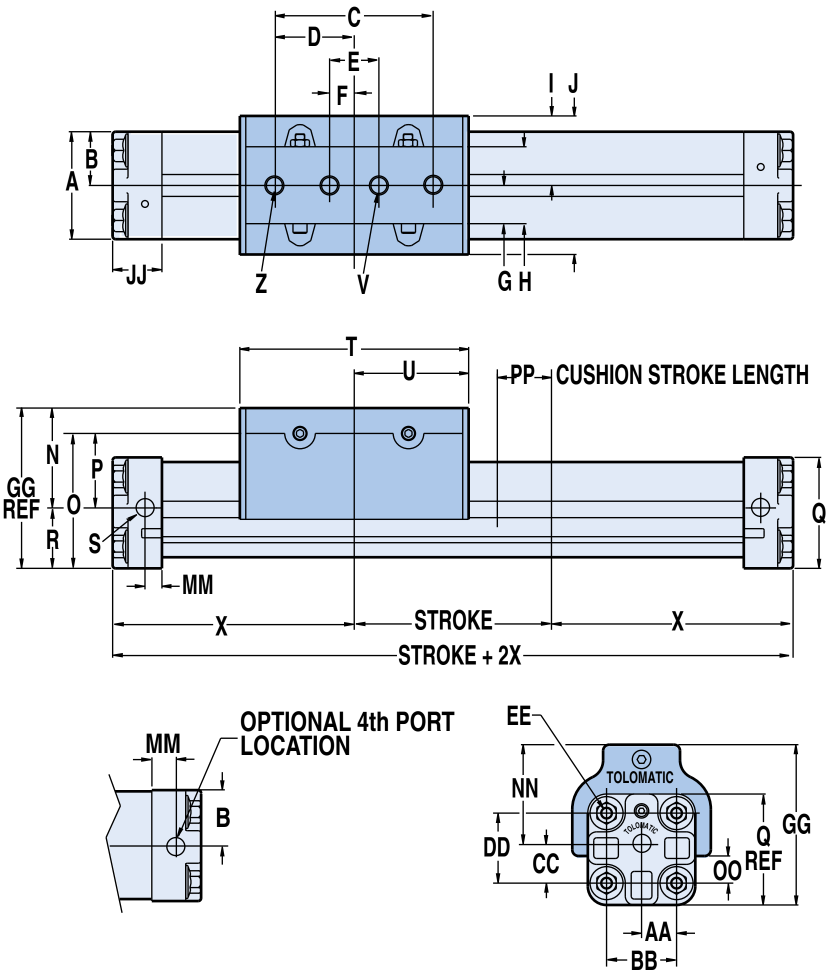

	U.S.12	U.S.15	Metric12	Metric15
A	2.18	2.85	55.4	72.4
B	1.09	1.42	27.7	36.1
C	3.20	4.25	81.3	108.0
D	1.60	2.12	40.6	53.8
E	1.00	1.00	25.4	25.4
F	0.50	0.50	12.7	12.7
G	0.78	0.90	19.8	22.9
H	1.56	1.80	39.6	45.7
I	1.41	1.75	35.8	44.5
J	2.82	3.50	71.6	89.0
N	1.83	2.13	46.5	54.1
O	2.48	2.95	63.0	74.9
P	1.25	1.51	31.0	38.4
Q	2.25	2.59	57.2	65.8
R	1.23	1.41	31.2	36.6
S	**NP** 1/4 NPT (3)	**NP** 1/4 NPT (3)	**TP** M 1/4 BSPT(3) **GP** MM 1/4 BSPP(3)	**TP** M 1/4 BSPT(3) **GP** MM 1/4 BSPP(3)
T	4.64	5.91	117.9	150.1
U	2.32	2.96	58.9	75.1
V	5/16-18 UNC x .31 DP	1/4-20 UNC x .38 DP	M8 x 7 DP	M8 x 10 DP
X	4.87	5.91	123.7	150.1
Z	1/4-20 UNC x .31 DP	5/16-18 UNC x .38 DP	M8 x 7 DP	M8 x 10 DP
AA	0.71	0.91	18.0	23.1
BB	1.42	1.81	36.1	46.0
CC	0.78	1.03	19.8	26.2
DD	1.42	1.81	36.1	46.0
EE	1/4-20 x .47 DP	1/4-20 x .47 DP	M6 x 12 DP	M6 x 12 DP
GG	3.06	3.54	77.7	90.7
JJ	1.00	1.25	25.4	31.8
MM	0.34	0.50	8.6	12.7
NN	1.83	2.13	46.5	54.1
OO	0.35	0.28	9.0	7.0
PP	1.10	1.29	27.9	32.7
	INCHES		MILLIMETERS	

SPECIFICATIONS

BC212/15 BENDING MOMENTS AND LOAD

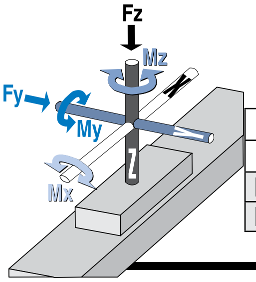

	BORE SIZE	MAX. BENDING MOMENT			MAX. LOAD
		My	Mx	Mz	Fz
U.S.12	1.25 in	290 in-lbs	75 in-lbs	130 in-lbs	120 lbs
U.S.15	1.50 in	500 in-lbs	275 in-lbs	200 in-lbs	180 lbs
Metric12	32 mm	32.77 N-m	8.47 N-m	14.69 N-m	54.42 kg
Metric15	40 mm	56.49 N-m	31.07 N-m	22.60 N-m	81.63 kg

	BORE SIZE	WEIGHT		MAX. STROKE LENGTH*	MAX. PRESSURE	TEMPERATURE RANGE
		BASE	PER UNIT OF STOKE			
U.S.12	1.25 in	4.56 lbs	0.21 lbs/in	288 in	100 PSI	20° to 140° F
U.S.15	1.50 in	8.18 lbs	0.34 lbs/in	298 in	100 PSI	20° to 140° F
Metric12	32 mm	2.068 kg	0.0036 kg/mm	7315 mm	6.895 bar	-7° to 60° C
Metric15	40 mm	3.7 kg	0.0058 kg/mm	7569 mm	6.895 bar	-7° to 60° C

***For longer strokes, alternate materials, mounting and/or fasteners – consult Tolomatic**

BC220 & BC225 Solid Bearing Rodless Cylinder

PERFORMANCE

🟥 BC220
🟩 BC225

BC220 & BC225

BC220 & BC225 OPTIONS	Page
Auxiliary Carrier	BC2_14
Floating Mount	BC2_18
Foot Mount	BC2_17
Shock Absorbers	BC2_22
Switches	BC2_20
Tube Supports	BC2_16
MORE INFORMATION	**Page**
Application Guidelines	BC2_26
Ordering	BC2_28
Selection	BC2_25

CUSHION DATA

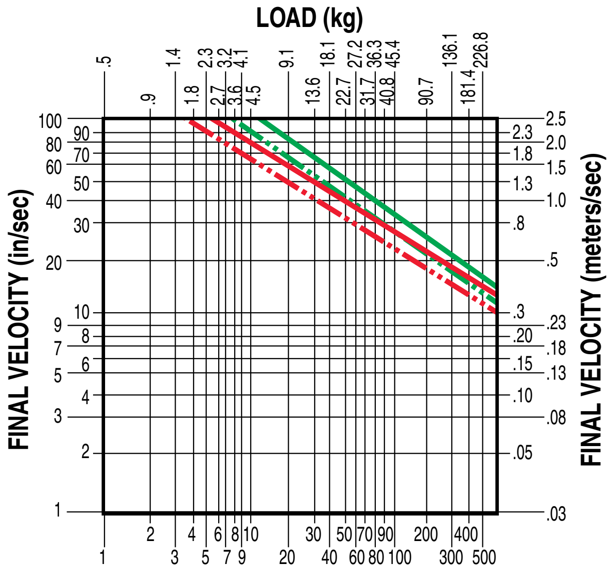

NOTE:
— Max. for any application
-··-··- Max. for continuously cycled application

THEORETICAL FORCE vs PRESSURE

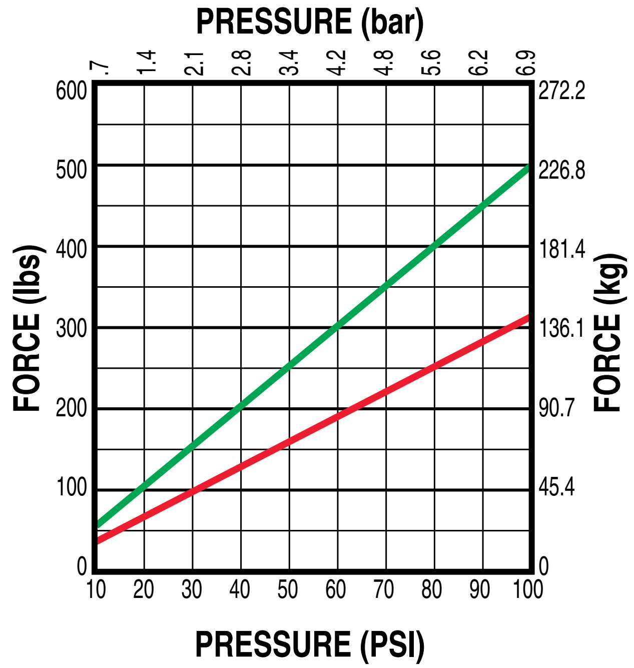

TUBE SUPPORT REQUIREMENTS

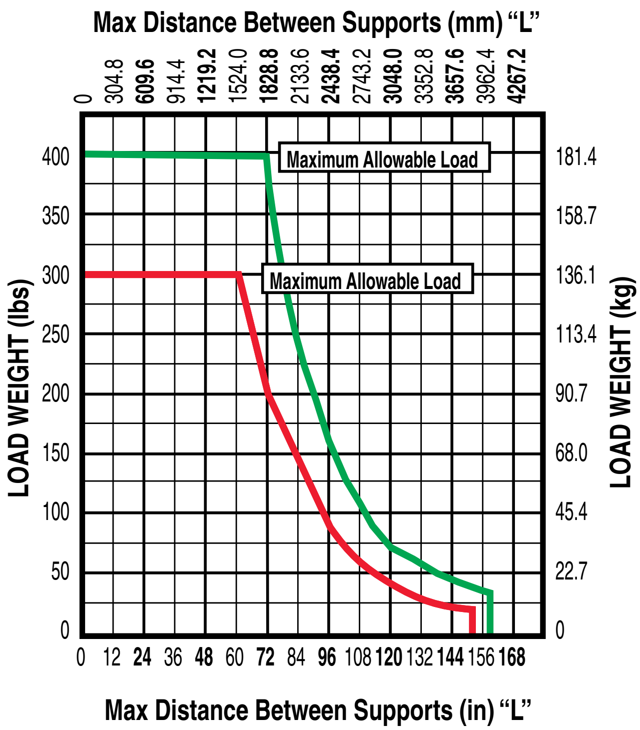

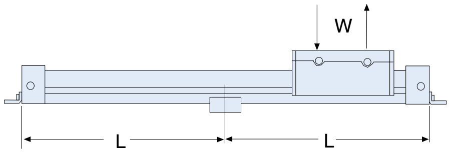

BC220 & BC225 Solid Bearing Rodless Cylinder

DIMENSIONS

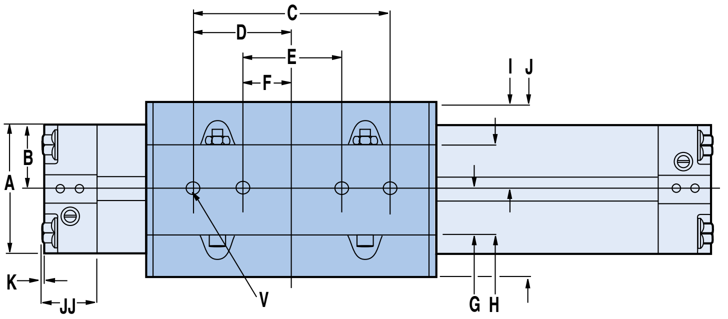

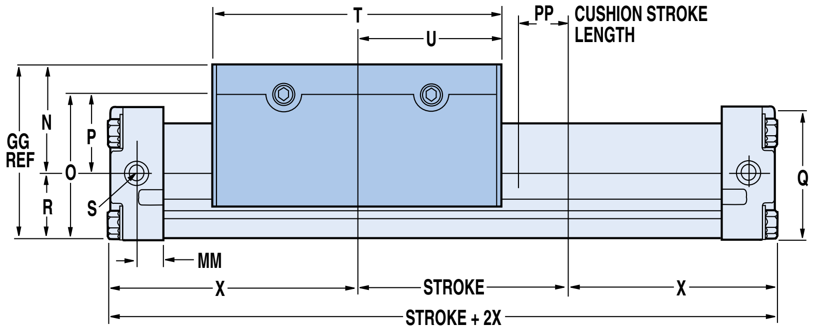

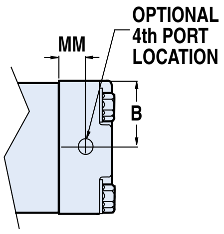

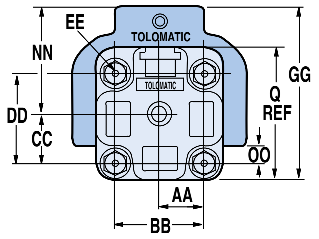

	U.S.20	U.S.25	Metric20	Metric25
A	3.25	4.25	82.6	108.0
B	1.62	2.13	41.1	54.1
C	5.00	6.00	127.0	152.4
D	2.50	3.00	63.5	76.2
E	2.50	3.00	63.5	76.2
F	1.25	1.50	31.8	38.1
G	1.16	1.27	29.5	32.4
H	2.30	2.55	58.4	64.8
I	2.22	2.81	56.4	71.4
J	4.44	5.62	112.8	142.8
K	0.06	0.03	1.5	0.8
N	2.75	3.20	69.9	81.3
O	3.69	4.67	93.7	118.6
P	2.00	2.37	50.8	60.2
Q	3.38	4.37	85.9	111.0
R	1.69	2.30	42.9	58.4
S	**NP** 3/8 NPT (3)	**NP** 3/8 NPT (3)	**TP** M 3/8 BSPT(3) **GP** GP 3/8 BSPP(3)	**TP** M 3/8 BSPT(3) **GP** GP 3/8 BSPP(3)
T	7.37	8.86	187.2	225.0
U	3.68	4.43	93.5	112.5
V	3/8-16 UNC x .44 DP	3/8-16 UNC x .50 DP	M10 x 11 DP	M10 x 12 DP
X	6.30	8.45	160.0	214.6
AA	1.12	1.44	28.5	36.6
BB	2.25	2.88	57.2	73.2
CC	1.25	1.75	31.8	44.5
DD	2.25	2.88	57.2	73.2
EE	5/16-18 x .88 DP	5/16-18 x .88 DP	M8 x 22 DP	M8 x 22 DP
GG	4.44	5.50	112.8	139.7
JJ	1.44	2.06	36.6	52.3
MM	0.69	1.00	17.5	25.4
NN	2.75	3.20	69.9	81.3
OO	0.43	0.76	10.9	19.3
PP	1.35	1.97	34.3	50.0
	INCHES		MILLIMETERS	

SPECIFICATIONS

BC220/25 BENDING MOMENTS AND LOAD

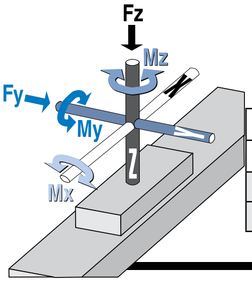

	BORE SIZE	MAX. BENDING MOMENT			MAX. LOAD
		My	Mx	Mz	Fz
U.S.20	2.00 in	1,100 in-lbs	300 in-lbs	325 in-lbs	300 lbs
U.S.25	2.50 in	1,800 in-lbs	450 in-lbs	400 in-lbs	400 lbs
Metric20	50 mm	124.28 N-m	33.90 N-m	36.72 N-m	136.05 kg
Metric25	63 mm	203.37 N-m	50.84 N-m	45.19 N-m	181.4 kg

	BORE SIZE	WEIGHT		MAX. STROKE LENGTH*	MAX. PRESSURE	TEMPERATURE RANGE
		BASE	PER UNIT OF STOKE			
U.S.20	2.00 in	14.12 lbs	0.54 lbs/in	274 in	100 PSI	20° to 140° F
U.S.25	2.50 in	31.90 lbs	1.01 lbs/in	163 in	100 PSI	20° to 140° F
Metric20	50 mm	6.4 kg	0.0093 kg/mm	6959 mm	6.895 bar	-7° to 60° C
Metric25	63 mm	14.467 kg	0.0173 kg/mm	4140 mm	6.895 bar	-7° to 60° C

***For longer strokes, alternate materials, mounting and/or fasteners – consult Tolomatic**

BC2 Auxiliary Carrier - 10, 12, 15, 20, 25 Sizes

PERFORMANCE

The auxiliary carrier option substantially increases load carrying and bending moments capacity over the standard single carrier models. As a general rule, the auxiliary carrier option is highly recommended in vertical applications (My) if the distance from the carrier mounting surface to the load center of gravity (CG) exceeds the overall length of the carrier. Auxiliary carriers can be ordered with (DW) or without (DO) an internal piston. (Auxiliary carriers without a piston have no cushion on the cylinder end closest to the auxiliary carrier.)

NOTE: breakaway pressure will increase when using auxiliary carrier.

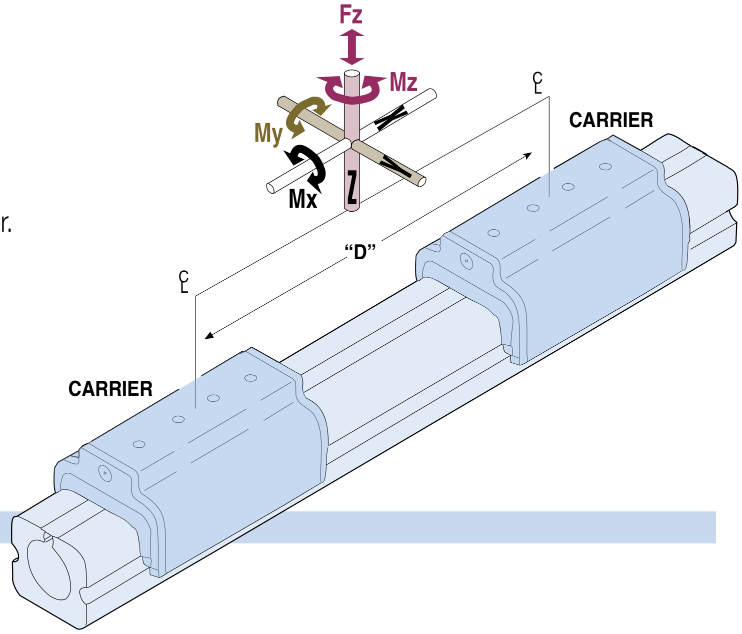

BENDING MOMENTS

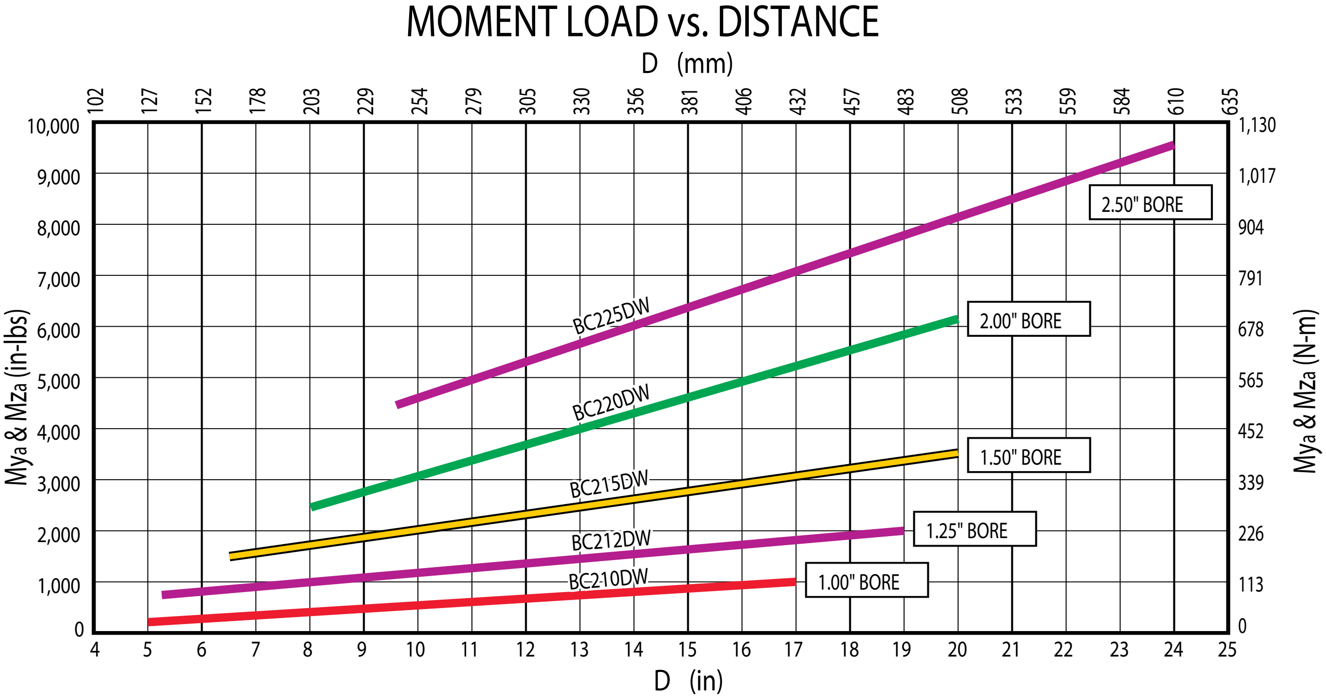
MOMENT LOAD vs. DISTANCE

Rates were calculated with the following assumptions:
1.) Coupling between carriers is rigid. 2.) Load is equally distribute d between carriers.
3.) Coupling device applies no misalignment loads to carriers.

	BORE SIZE		"D" MINIMUM *				MAX. BENDING MOMENT						MAX. LOAD	
			(w/o Piston)		(w/ Piston)		My**		Mx		Mz**		Fz	
	in	mm	in	mm	in	mm	in-lbs	N-m	in-lbs	N-m	in-lbs	N-m	lbs	kg
10	1.00	25	5.07	129.0	5.07	129.0	287	32.4	110	12.4	287	32.4	120	54.4
12	1.25	32	5.17	131.0	6.85	174.0	822	92.9	150	16.9	822	92.9	240	108.9
15	1.50	40	6.46	164.0	8.07	205.0	1,453	164.1	550	62.1	1,453	164.1	360	163.3
20	2.00	50	8.10	206.0	8.10	206.0	2,430	274.6	600	67.8	2,430	274.6	600	272.2
25	2.50	63	9.62	244.0	11.04	2810.4	4,416	498.9	900	101.7	4,416	498.9	800	362.9

* "D" is distance between carriers

** Loads calculated are at minimum "D", for substantially higher My and Mz loads increase "D" and refer to graph above

BC2 Auxiliary Carrier - 10, 12, 15, 20, 25 Sizes

DIMENSIONS

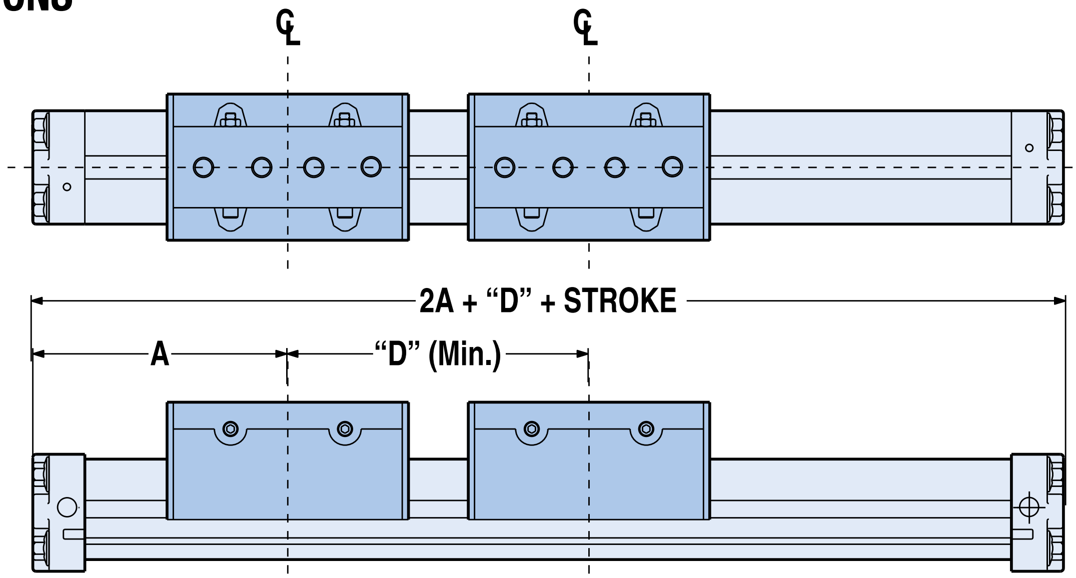

	BORE SIZE		A		"D" MINIMUM *			
					(w/o Piston)		(w/ Piston)	
	in	mm	in	mm	in	mm	in	mm
10	1.00	25	3.94	100.1	5.07	129.0	5.07	129.0
12	1.25	32	4.90	124.5	5.17	131.0	6.85	174.0
15	1.50	40	5.91	150.1	6.46	164.0	8.07	205.0
20	2.00	50	6.30	160.0	8.10	206.0	8.10	206.0
25	2.50	63	8.46	214.9	9.62	244.0	11.04	280.4

AUXILIARY CARRIER

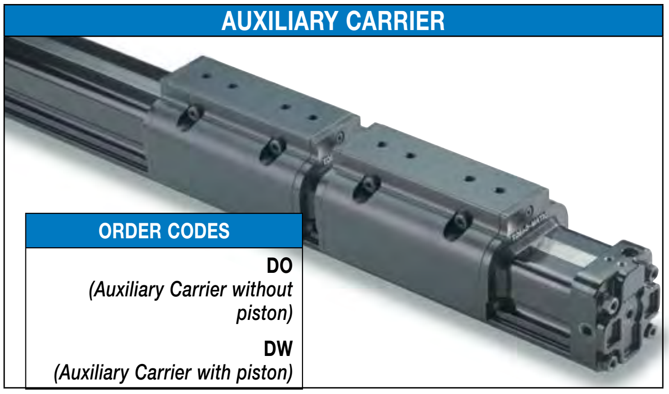

ORDER CODES

DO
(Auxiliary Carrier without piston)

DW
(Auxiliary Carrier with piston)

ORDERING INFORMATION

When ordering, determine the minimum distance required between carriers (dimension "D" in Auxiliary Carrier Bending Moments chart).

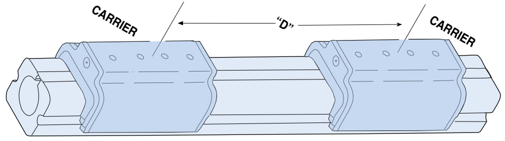

Determine your working stroke and your "D" dimension, then enter these into your configuration string. (Example: BC215SK50.00DW15.00RT2) The configurator will calculate the overall length of the actuator.

ASSEMBLY INFORMATION

IMPORTANT INFORMATION REGARDING AUXILIARY CARRIER PLACEMENT

When a BC2 cylinder is ordered with auxiliary carrier, it is always placed to the right (while facing the switch mounted or open port side) of the main carrier. This is for auxiliary carriers with (DW)/or without (DO) piston and for units with/ or without shock absorbers. When the auxiliary carrier is ordered without (DO) piston the carrier without piston will be marked.

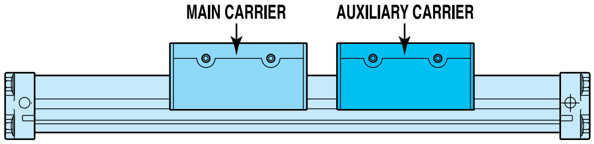

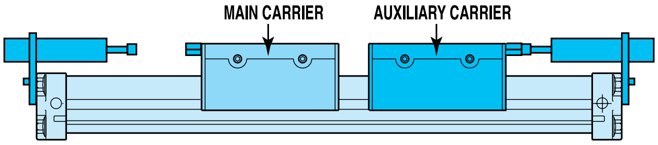

BC2 Tube Supports - ALL Sizes

TUBE SUPPORT

ORDER CODE

TS_
(_ = Number ordered)

Tube supports are mounted to the BC2 band cylinder during assembly procedure. Made of black-anodized aluminum, tube supports are designed to fit into dovetail grooves which run the length of the cylinder tube. Refer to the tube support graph to determine the number of tube supports required.

NOTE: Switches cannot be mounted on the same face of the actuator as tube supports.

PERFORMANCE

TUBE SUPPORT REQUIREMENTS

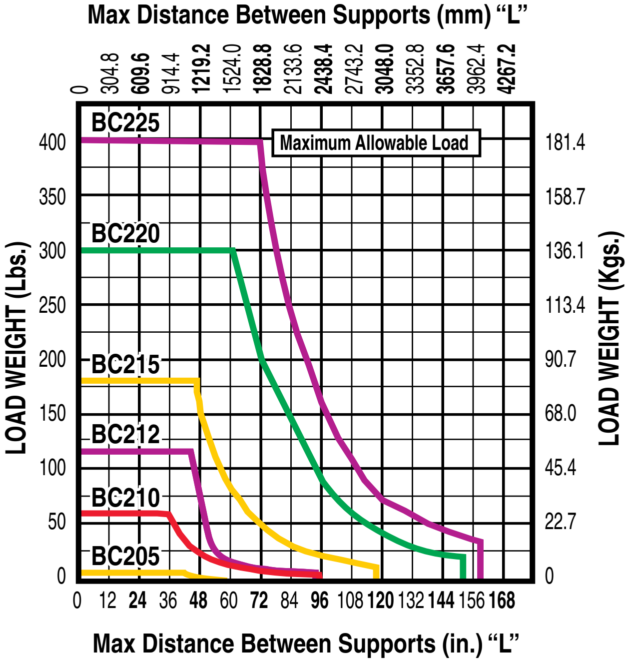

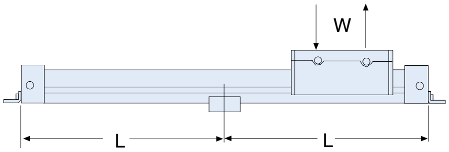

DIMENSIONS

05

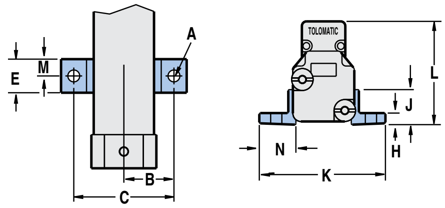

10, 12, 15, 20, 25

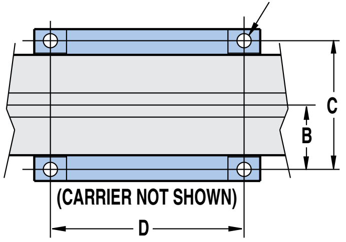

10, 12, 15, 20

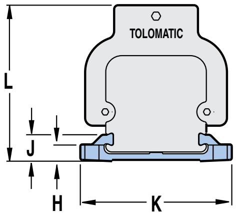

10, 12, 15, 20, 25

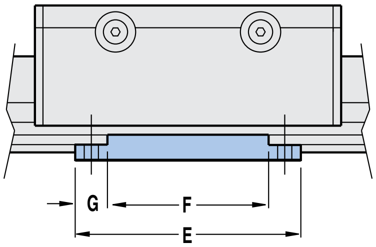

25

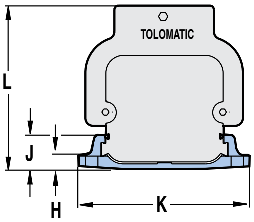

U.S. Standard	BORE SIZE	A Ø	B	C	D	E	F	G	H	J	K	L	M	N
05	0.50	0.18	0.75	1.50	–	0.50	–	–	0.18	0.54	1.88	1.60	0.65	0.50
10	1.00	0.22	1.00	2.00	3.00	3.50	2.50	0.50	0.25	0.41	2.36	2.43	–	–
12	1.25	0.27	1.31	2.63	4.50	5.00	4.00	0.50	0.40	0.81	3.12	3.23	–	–
15	1.50	0.27	1.50	3.00	4.50	5.00	4.00	0.50	0.31	0.70	3.50	3.62	–	–
20	2.00	0.41	1.875	3.750	5.75	6.38	5.00	0.69	0.375	0.87	4.44	4.53	–	–
25	2.50	0.42	2.563	5.125	7.75	8.50	7.00	0.75	0.437	1.17	6.00	5.56	–	–

Dimensions in inches

Metric	BORE SIZE	A Ø	B	C	D	E	F	G	H	J	K	L	M	N
05	12	4.6	19.1	38.1	–	12.7	–	–	4.6	13.7	47.7	40.6	16.5	12.7
10	25	5.6	25.4	50.8	76.2	88.9	63.5	12.7	6.3	10.4	59.9	61.7	–	–
12	32	6.7	33.3	66.8	114.3	127.0	101.6	12.7	10.2	20.6	79.2	82.0	–	–
15	40	6.7	38.1	76.2	114.3	127.0	101.6	12.7	7.9	17.8	88.9	91.9	–	–
20	50	10.5	47.6	95.3	146.1	162.1	127.0	17.5	9.5	22.1	112.8	115.1	–	–
25	63	10.7	65.1	130.2	196.9	215.9	177.8	19.1	11.1	29.7	152.4	141.2	–	–

Dimensions in millimeters

BC2 Foot Mounts - ALL Sizes

FOOT MOUNT

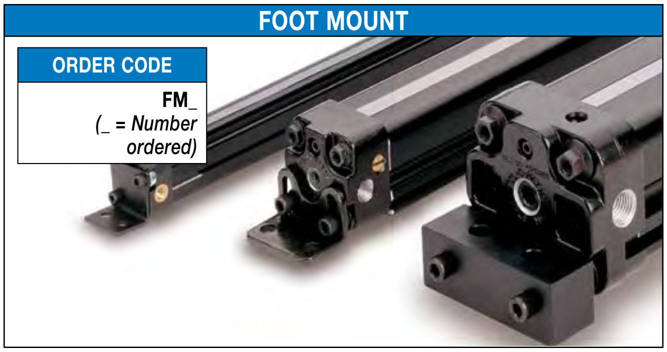

ORDER CODE

FM_
(_ = Number ordered)

For mounting other than flush. Foot mounts may be specified on one or both ends of the cylinder.

DIMENSIONS

05

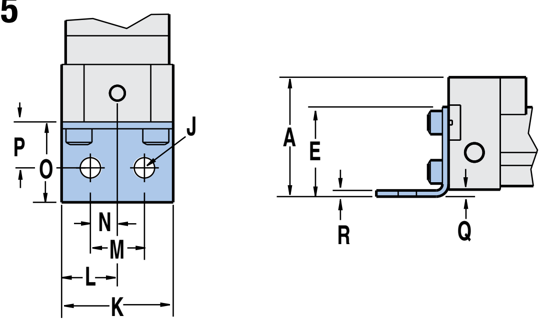

15

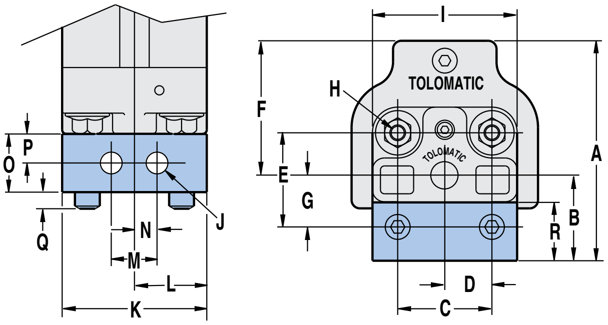

10, 12

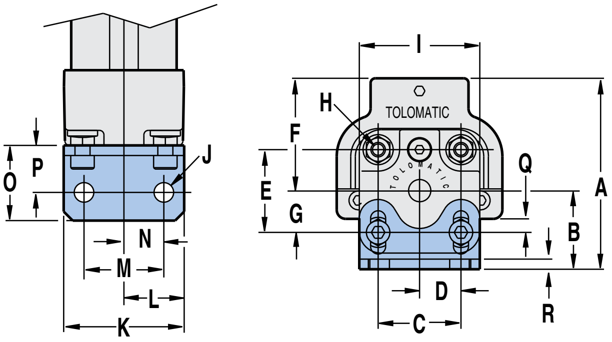

20,25

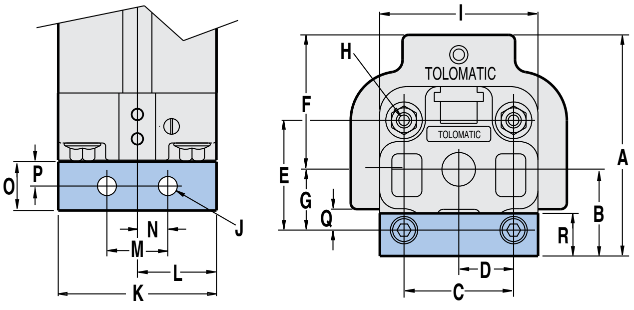

U.S. Std.	BORE SIZE	A	B	C	D	E	F	G	H	I	J Ø	K	L	M	N	O	P	Q	R
05	0.50	1.62	–	–	–	0.87	–	–	–	–	0.180	0.97	0.49	0.47	0.24	0.70	0.40	0.06	0.06
10	1.00	2.36/2.73	0.86/1.23	1.10	0.55	1.10	1.50	0.55	#10-24 x .43 DP	1.58	0.260	1.60	0.80	1.06	0.53	1.00	0.63	0.18	0.14
12	1.25	3.21/3.71	1.38/1.88	1.42	0.71	1.42	1.83	0.78	1/4-20 x .47 DP	2.18	0.328	2.09	1.05	1.42	0.71	0.84	0.49	0.35	0.13
15	1.50	3.69	1.56	1.82	0.91	1.81	2.13	1.03	1/4-20 x .47 DP	2.85	0.328	2.83	1.42	1.18	0.59	1.00	0.50	0.25	1.00
20	2.00	4.53	1.78	2.25	1.13	2.25	2.75	1.25	5/16-18 x 1.0 DP	3.25	0.390	3.25	1.63	1.25	0.63	1.00	0.50	0.43	0.88
25	2.50	5.65	2.45	2.88	1.44	2.88	3.20	1.75	5/16-18 x 1.0 DP	4.25	0.437	4.25	2.13	1.89	0.95	1.18	0.59	0.76	1.00

Dimensions in inches

Metric	BORE SIZE	A	B	C	D	E	F	G	H	I	J Ø	K	L	M	N	O	P	Q	R
05	12	41.1	–	–	–	22.1	–	–	–	–	4.6	24.6	12.3	11.9	6.0	20.4	10.2	1.5	1.5
10	25	59.7/69.3	21.8/31.2	27.9	14.0	27.9	38.1	14.0	M5 x 11 DP	40.1	6.6	40.6	20.3	26.9	13.5	25.4	15.9	4.7	3.4
12	32	81.5/94.2	35.1/47.8	36.1	18.0	36.1	46.5	19.8	M6 x 12 DP	55.4	8.3	53.1	26.7	36.1	18.0	21.3	12.4	9.0	3.2
15	40	93.7	39.6	46.2	23.1	46.0	54.1	26.2	M6 x 12 DP	72.4	8.3	71.9	36.1	30.0	15.0	25.4	12.7	6.0	25.4
20	50	115.1	45.7	57.2	28.7	57.2	69.9	31.8	M8 x 25 DP	82.6	9.9	82.6	41.2	31.8	16.0	25.4	12.7	10.9	22.2
25	63	143.5	62.2	73.2	35.6	73.2	81.3	44.5	M8 x 25 DP	108.0	11.1	108.0	54.1	48.0	24.1	30.0	15.0	19.3	25.4

Dimensions in millimeters

BC2 Floating Mount Bracket - ALL Sizes

FLOATING MOUNT BRACKET

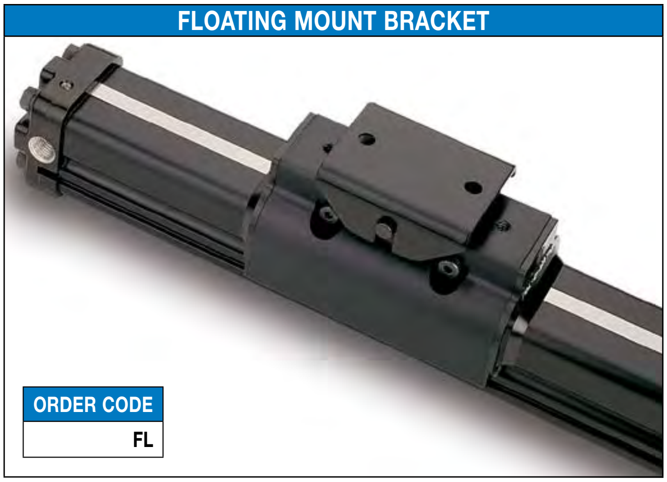

ORDER CODE
FL

For applications where a BC2 band cylinder is moving a load that is externally guided and supported. An externally guided load, not parallel to the BC2 band cylinder may result in cylinder binding. The floating mount bracket compensates for nonparallelism between the cylinder and the external guide.

❌ (Floating mount brackets are not to be used in conjunction with shock absorbers)

DIMENSIONS

05

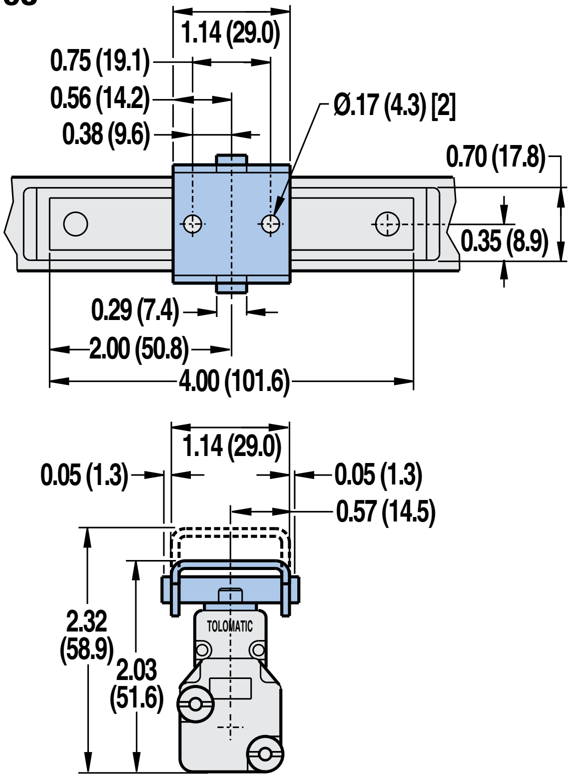

10

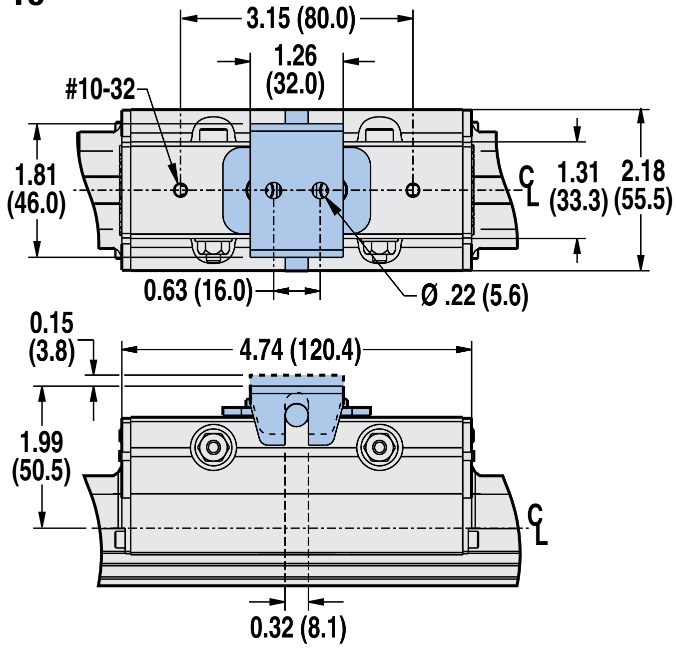

Dimensions in inches (parenthesis indicate dimensions in millimeters)

BC2 Floating Mount Bracket - ALL Sizes

DIMENSIONS

12

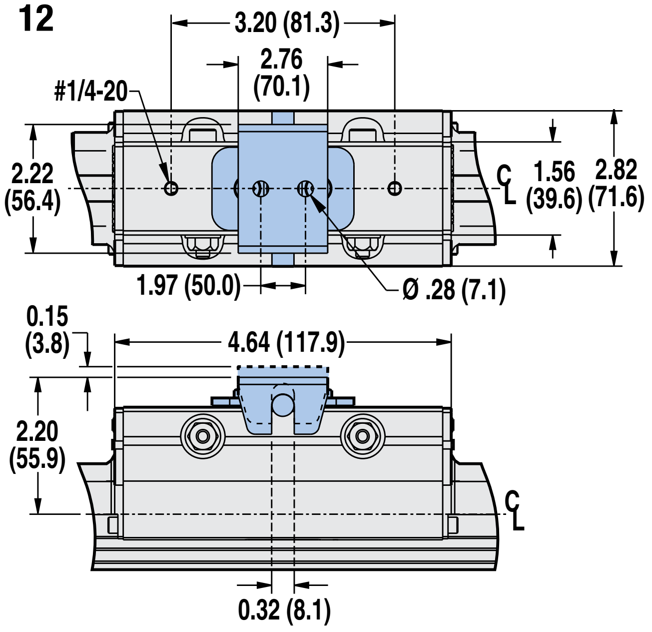

15

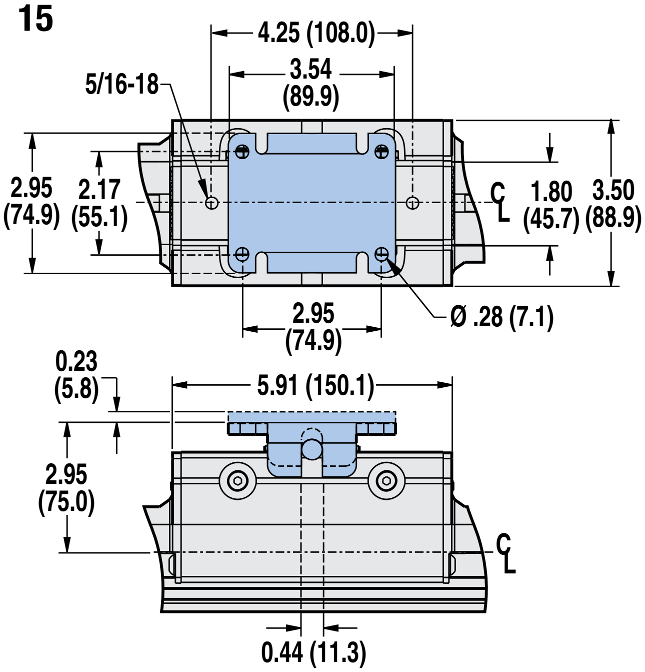

20

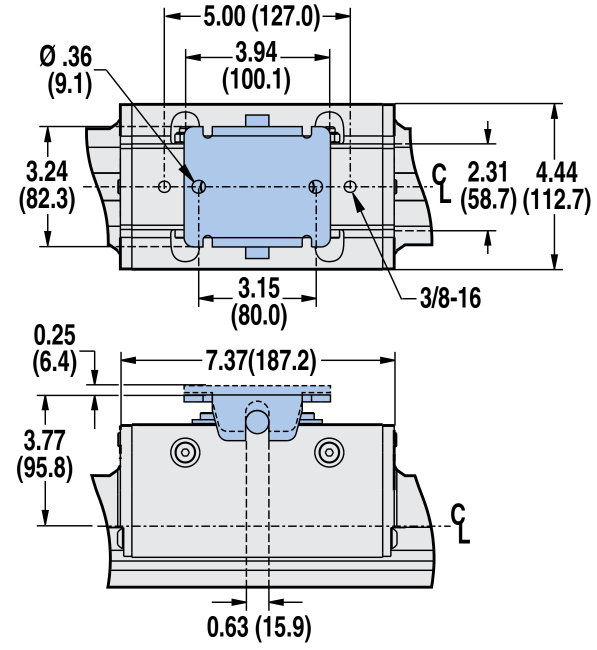

25

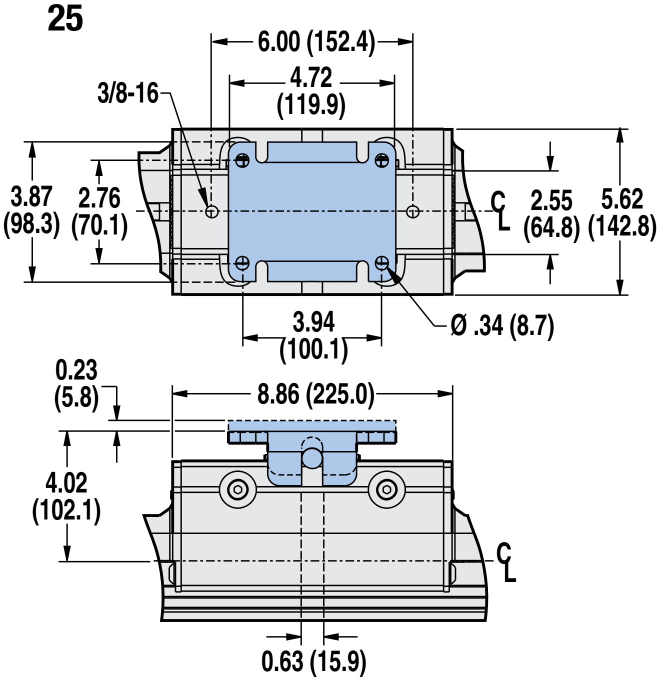

Dimensions in inches (parenthesis indicate dimensions in millimeters)

BC2 Switches - ALL Sizes

SWITCHES

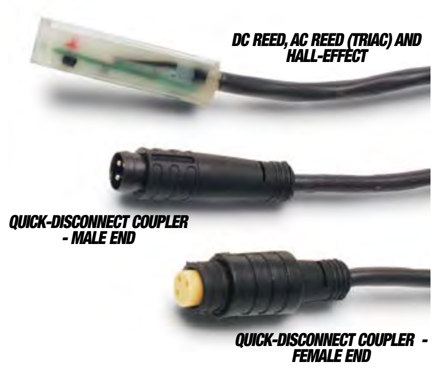

There are 10 sensing choices: DC reed, form A (open) or form C (open or closed); AC reed (Triac, open); Hall-effect, sourcing, PNP (open); Hall-effect, sinking, NPN (open); each with either flying leads or QD (quick disconnect). Commonly used to send analog signals to PLC (programmable logic controllers), TLL, CMOS circuit or other controller device. These switches are activated by the actuator's magnet.

Switches contain reverse polarity protection. QD cables are shielded; shield should be terminated at flying lead end.

If necessary to remove factory installed switches, be sure to reinstall on the same of side of actuator with scored face of switch toward internal magnet.

SPECIFICATIONS

	REED DC				REED AC		HALL-EFFECT DC			
ORDER CODE	RT	RM	BT	BM	CT	CM	TT	TM	KT	KM
LEAD	5m	QD*	5m	QD*	5m	QD*	5m	QD*	5m	QD*
CABLE SHIELDING	Unshielded	Shielded†	Unshielded	Shielded†	Unshielded	Shielded†	Unshielded	Shielded†	Unshielded	Shielded†
SWITCHING LOGIC	"A" Normally Open		"C" Normally Open or Closed		Triac Normally Open		PNP (Sourcing) Normally Open		NPN (Sinking) Normally Open	
MECHANICAL CONTACTS	Single-Pole Single-Throw		Single-Pole Double-Throw		Single-Pole Single-Throw		NO, These Are Solid State Components			
COIL DIRECT	Yes		Yes		Yes		—			
POWER LED	None		None		None		None		None	
SIGNAL LED	Red						Red		Red	
OPERATING VOLTAGE	200 Vdc max.		120 Vdc max.		120 Vac max.		5 - 25 Vdc			
OUTPUT RATING	—				—		25 Vdc, 200mA dc			
OPERATING TIME	0.6 msec max. (including bounce)		0.7 msec max. (including bounce)		—		< 10 micro sec.			
OPERATING TEMPERATURE	-40°F [-40°C] to 158°F [70°C]						0°F [-18°C] to 150°F [66°C]			
RELEASE TIME	1.0 msec. max.				—		—			
ON TRIP POINT	—				—		150 Gauss maximum			
OFF TRIP POINT	—				—		40 Gauss minimum			
**POWER RATING (WATTS)	10.0 §		3.0 §§		10.0		5.0			
VOLTAGE DROP	2.6 V typical at 100 mA		NA		—		—			
RESISTANCE	0.1 Ω Initial (Max.)				—		—			
CURRENT CONSUMPTION	—				1 Amp at 86°F [30°C]	0.5 Amp at 140°F [60°C]	200 mA at 25 Vdc			
FREQUENCY	—				47 - 63 Hz		—			
CABLE MIN. BEND RADIUS STATIC	0.630" *[16mm]*									
DYNAMIC	Not Recommended									

CAUTION: DO NOT OVER TIGHTEN SWITCH HARDWARE WHEN INSTALLING!

** **WARNING**: Do not exceed power rating (Watt = Voltage X Amperage). Permanent damage to sensor will occur.

*QD = Quick Disconnect; Male coupler is located 6" [152mm} from sensor,
Female coupler to flying lead (part #2503-1025) distance is 197" [5m] also see Cable Shielding specification above

REPLACEMENT OF QD SWITCHES MANUFACTURED BEFORE JULY 1, 1997: It will be necessary to replace or rewire the female end coupler.

CURRENT
Quick disconnect Wiring

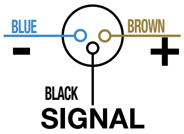

OLD
Quick disconnect Wiring

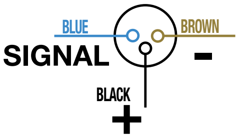

Reed Switch Life Expectancy: Up to 200,000,000 cycles (depending on load current, duty cycle and environmental conditions)

† Shielded from the female quick disconnect coupler to the flying leads. Shield should be terminated at flying lead end.

§ Maximum current 500mA (not to exceed 10VA) Refer to Temperature vs. Current graph and Voltage Derating graph

§§ Maximum current 250mA (not to exceed 3VA) Refer to Temperature vs. Current graph and Voltage Derating graph

BC2 Switches - ALL Sizes

PERFORMANCE

TEMP. vs CURRENT, DC REED

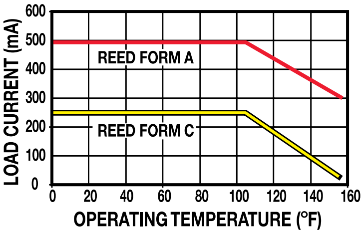

TEMP. vs CURRENT, AC REED

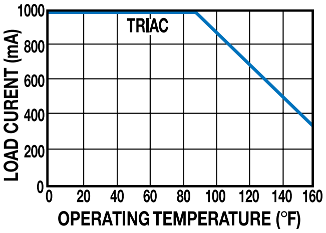

VOLTAGE DERATING, DC REED

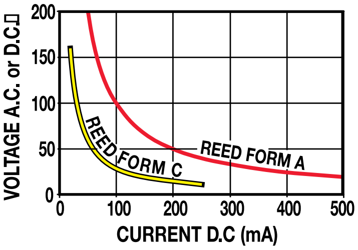

WIRING DIAGRAMS

RT & RM DC REED, FORM A

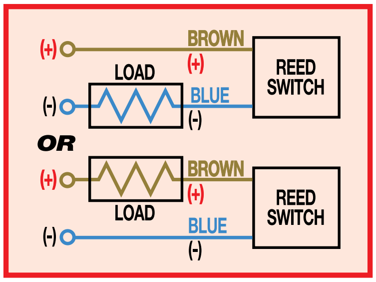

CT & CM AC REED, TRIAC

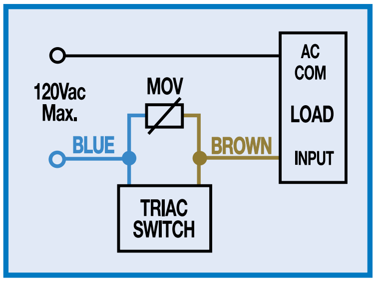

BT & BM DC REED, FORM C

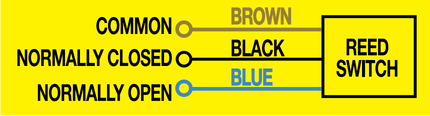

TT & TM HALL-EFFECT, SOURCING, PNP

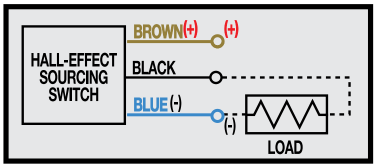

KT & KM HALL-EFFECT, SINKING, NPN

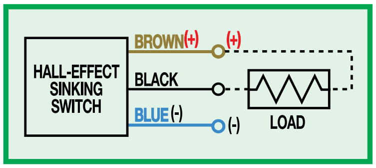

INSTALLATION INFORMATION

THE NOTCHED FACE OF THE SWITCH INDICATES THE SENSING SURFACE AND MUST FACE TOWARD THE MAGNET.

HALL-EFFECT SWITCHES ARE NOT AVAILABLE FOR BC205

Some actuators may require switch mounting on a specific side of the assembly. Call Tolomatic for details.

DIMENSIONS

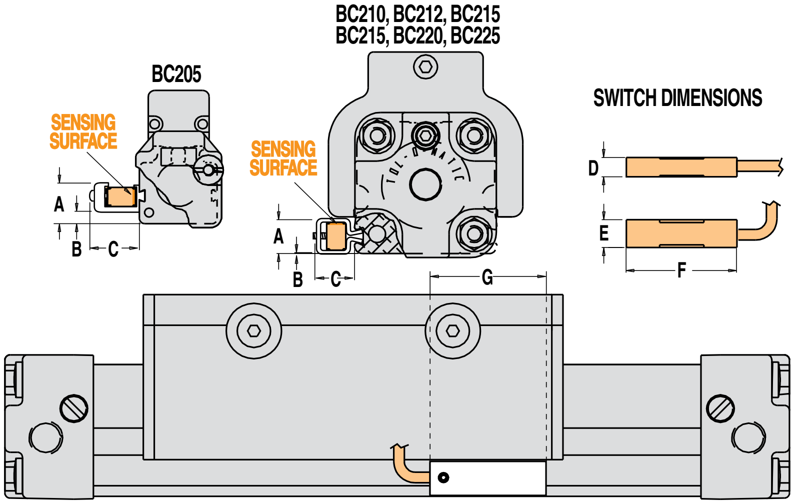

SIZE	BORE	A	B	C	D	E	F	G
05	0.50	0.445	0.157	0.518	0.219	0.315	1.25	1.45
10	1.00	0.383	0.011	0.448	0.219	0.315	1.25	1.45
12	1.25	0.541	0.169	0.448	0.219	0.315	1.25	1.45
15	1.50	0.548	0.161	0.432	0.219	0.315	1.25	1.45
20	2.00	0.732	0.344	0.448	0.219	0.315	1.25	1.45
25	2.50	1.082	0.710	0.432	0.219	0.315	1.25	1.45

Dimensions in inches

SIZE	BORE	A	B	C	D	E	F	G
05	*12*	*11.30*	*3.99*	*13.16*	*5.56*	*8.00*	*31.75*	*36.83*
10	*25*	*9.73*	*0.28*	*11.38*	*5.56*	*8.00*	*31.75*	*36.83*
12	*32*	*13.74*	*4.29*	*11.38*	*5.56*	*8.00*	*31.75*	*36.83*
15	*40*	*13.92*	*4.09*	*10.97*	*5.56*	*8.00*	*31.75*	*36.83*
20	*50*	*18.59*	*8.74*	*11.38*	*5.56*	*8.00*	*31.75*	*36.83*
25	*63*	*27.48*	*18.03*	*10.97*	*5.56*	*8.00*	*31.75*	*36.83*

Dimensions in millimeters

BC2 Shock Absorbers - 10, 12, 15, 20, 25 Sizes

SHOCK ABSORBERS

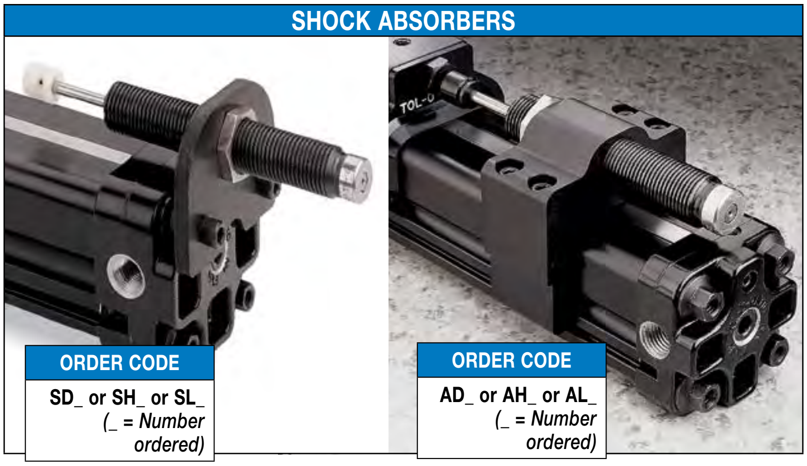

ORDER CODE

SD_ or SH_ or SL_
(_ = Number ordered)

ORDER CODE

AD_ or AH_ or AL_
(_ = Number ordered)

Rodless cylinders with standard internal cushion offer an effective method of decelerating loads. However, all Tolomatic rodless cylinders are capable of carrying heavier loads at higher velocities than the cylinder cushion can absorb. Optional shock absorbers can be used to increase the cylinder's life and broaden the application range for the cylinder model you have chosen.

Tolomatic offers two types of shock absorber options for use with rodless cylinders. Standard shock absorbers, which are positioned on the cylinder heads for end-of-stroke deceleration and adjustable shock absorbers which allows the shock to be positioned at any point along the cylinder.

Typical shock absorber life varies between 1-2 million cycles (depending on environment) appropriate preventative maintenance should be considered in high cyclic applications.

NOTE: When 2 shock absorbers are ordered, the unit will be assembled with NO internal cushions.

NOTE: Adjustable shock absorbers will reduce stroke length. To maintain desired stroke length: when ordering increase stroke length by the dimension in the table below for each adjustable shock absorber ordered.

10	12	15	20	25
0.75" *[19.0mm]*	0.03" *[0.7mm]*	0.35" *[8.9mm]*	0.85" *[21.6mm]*	0.85" *[21.6mm]*

CAUTION: In applications which result in a load bending moment at deceleration, care should be taken to decelerate the load rather than the carrier of the band cylinder.

DIMENSIONS

STANDARD SHOCK

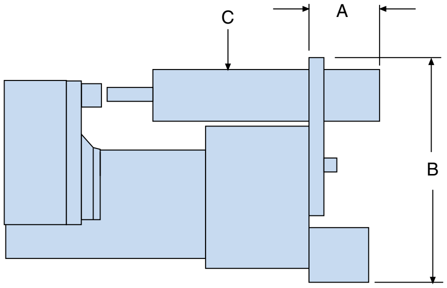

SIZE	BORE	A	B	C (Thread Size)
10	1.00	2.35	2.50	9/16-18 UNF-2B
12	1.25	2.23	3.50	3/4-16 UNF-2B
15	1.50	2.23	4.00	3/4-16 UNF-2B
20	2.00	2.62	4.70	1-12 UNF-2B
25	2.50	1.17	6.00	1-12 UNF-2B

Dimensions in inches

SIZE	BORE	A	B	C (Thread Size)
10	*25*	*59.7*	*63.5*	*M14x1.5-6g*
12	*32*	*56.6*	*88.9*	*M20x1.5-6g*
15	*40*	*56.6*	*101.6*	*M20x1.5-6g*
20	*50*	*66.5*	*119.4*	*M25x1.5-6g*
25	*63*	*29.7*	*152.4*	*M25x1.5-6g*

Dimensions in millimeters

ADJUSTABLE POSITION SHOCK

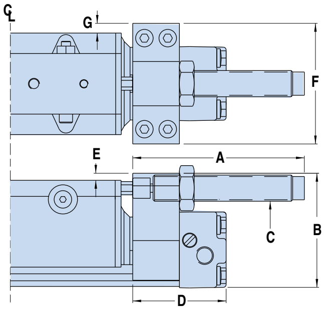

SIZE	BORE	A	B	C (Thread Size)	D	E	F	G
10	1.00	3.68	2.45	9/16-18 UNF-2B	2.00	0.15	2.59	0.21
12	1.25	4.39	3.19	3/4-16 UNF-2B	2.25	0.13	2.82	0
15	1.50	4.39	3.62	3/4-16 UNF-2B	2.50	0.05	3.50	0
20	2.00	4.75	4.60	1-12 UNF-2B	3.13	0.16	4.44	0
25	2.50	4.75	5.63	1-12 UNF-2B	4.47	0.17	5.63	0

Dimensions in inches

SIZE	BORE	A	B	C (Thread Size)	D	E	F	G
10	*25*	*93.5*	*62.2*	*M14x1.5-6g*	*50.8*	*3.8*	*65.8*	*5.3*
12	*32*	*111.5*	*81.0*	*M20x1.5-6g*	*57.2*	*3.3*	*71.6*	*0*
15	*40*	*111.5*	*92.0*	*M20x1.5-6g*	*63.5*	*1.3*	*88.9*	*0*
20	*50*	*120.7*	*116.8*	*M25x1.5-6g*	*79.5*	*4.1*	*112.8*	*0*
25	*63*	*120.7*	*143.0*	*M25x1.5-6g*	*113.5*	*4.3*	*143.0*	*0*

Dimensions in millimeters

BC2 Shock Absorbers - 10, 12, 15, 20, 25 Sizes: PERFORMANCE

VELOCITY vs LOAD

BC210

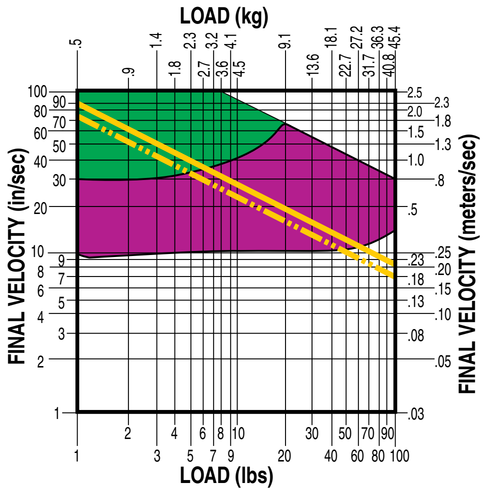

BC212

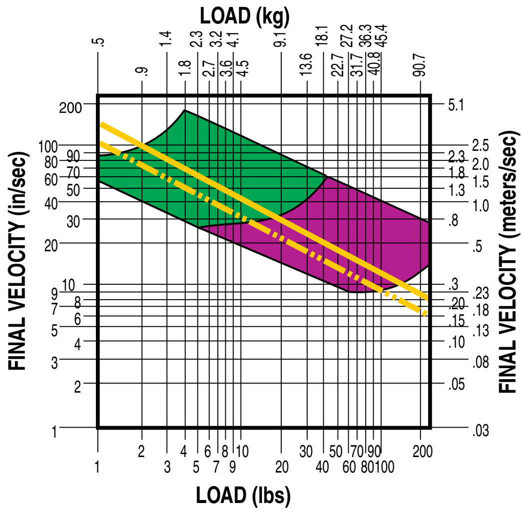

BC215

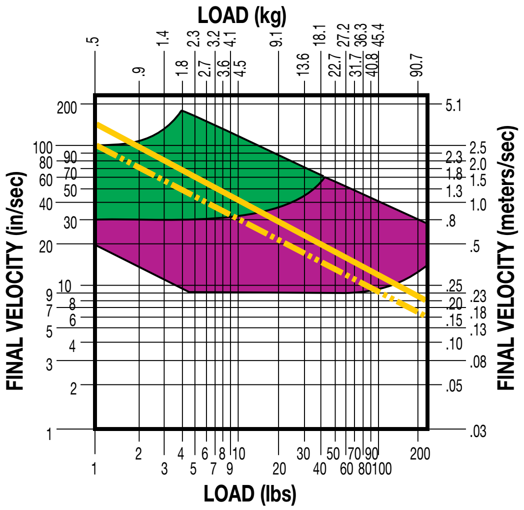

BC220

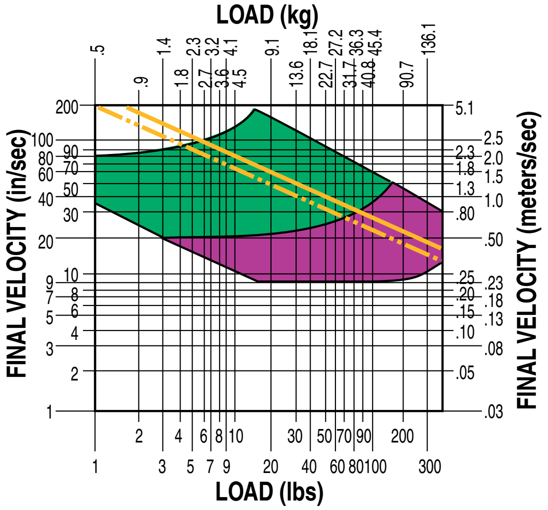

BC225

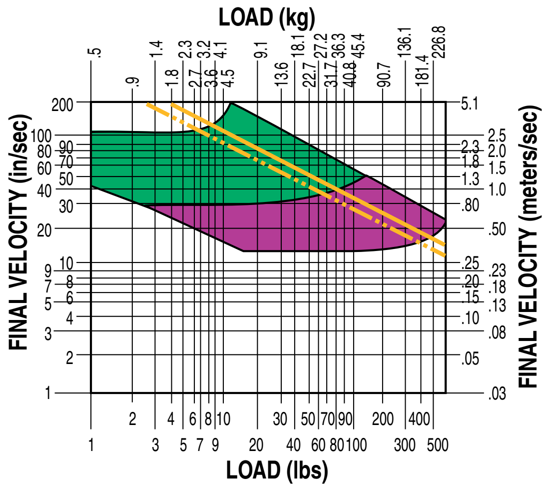

🟩 LIGHT DUTY (Light load/High velocity)

🟪 HEAVY DUTY (Heavy load/Low velocity)

🟨 AIR CUSHION DATA

NOTE: If final (or impact) velocity cannot be calculated directly, a reasonable guideline to use is 2 x average velocity.

Application Data Worksheet

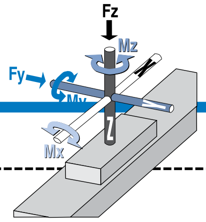

STROKE LENGTH ________________

☐ inch (SK) (U.S. Standard)

☐ millimeters (SM) (Metric)

AVAILABLE AIR PRESSURE ______

☐ PSI (U.S. Standard)

☐ bar (Metric)

REQUIRED THRUST FORCE ______

☐ lbf (U.S. Standard)

☐ N (Metric)

LOAD __________________________

☐ lb (U.S. Standard)

☐ kg (Metric)

LOAD CENTER OF GRAVITY DISTANCE TO CARRIER CENTER

d_x ________

d_y ________

d_z ________

☐ inch (U.S. Standard)

☐ millimeters (Metric)

FORCES APPLIED TO CARRIER

F_z ________

F_y ________

☐ lbf (U.S. Standard)

☐ N (Metric)

BENDING MOMENTS APPLIED TO CARRIER

M_x ________

M_y ________

M_z ________

☐ in-lbs (U.S. Standard)

☐ N-m (Metric)

FINAL VELOCITY ________________

☐ in/sec (U.S. Standard)

☐ mm/sec (Metric)

MOVE TIME sec. ________________

NO. OF CYCLES ________________

☐ per minute

☐ per hour

ORIENTATION

☐ Horizontal

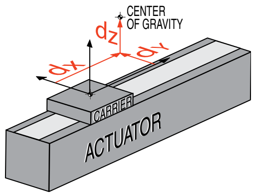

☐ Side

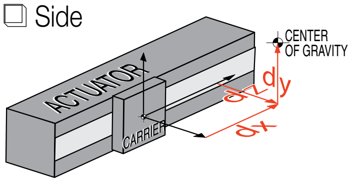

☐ Horizontal Down

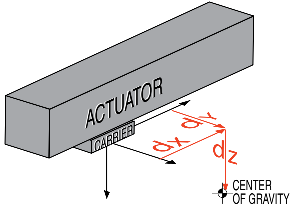

☐ Vertical

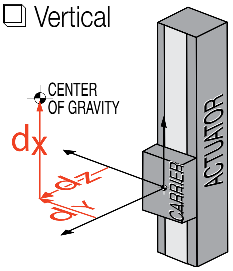

☐ Angled α ________

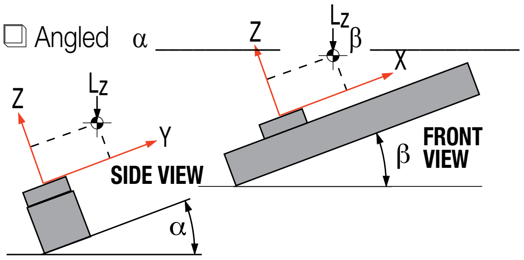

OTHER ISSUES:
(i.e. Environment, Temperature, Contamination, etc.) ____________________

____

____

____

Contact information: ____________________

____

____

____

Fax (1-763-478-8080) or call Tolomatic (1-800-328-2174) with the above information.
We will provide any assistance needed to determine the proper actuator.

Rodless Cylinder Selection Guidelines - BC2, BC3, BC4, LS - All Sizes

PROVIDING LOAD GUIDANCE AND SUPPORT

The process of selecting a load bearing actuator for a given application can be complex. It is highly recommended that you contact Tolomatic or a Tolomatic Distributor for assistance in selecting the best actuator for your application. The following overview of the selection guidelines are for educational purposes only.

1 COMPILE APPLICATION REQUIREMENTS

To determine the appropriate Band Cylinder or Linear Slide model for an application, compile the following information:

- Available pressure (PSI)
- Weight of load (lbs or kg)
- Orientation of load (lbs or kgs)
- Velocity of load (in/sec or mm/sec)
- Stroke length (in or mm)

HINT: Use Tolomatic sizing and selection software, download at: tolomatic.com

2 SELECT CYLINDER SIZE

- Consult the Theoretical Force vs. Pressure charts.
- Cross-reference the load force (or load weight if force is not known) and the available operating pressure. If the intersection falls below the diagonal line, and if moments do not exceed maximum values listed for that model (see Step 3), the actuator will accommodate the application.

  If the intersection is above the diagonal line, a larger cylinder bore size should be considered.

NOTE: Additional force may be required to obtain the necessary acceleration for vertical or horizontal loads.

3 DETERMINE NATURE OF LOAD AND THE EFFECT OF BENDING MOMENTS

If the cylinder will guide and support a load located directly over the center of carrier, bending moments will not be a factor in the cylinder selection.

NOTE: The maximum load "L" must not exceed the capacity limits of the cylinder selected.

- Bending Moments

  For off center or side loads, determine the distance from the center of mass of the load to the center of the carrier bracket. This measurement is needed to calculate the torque for bending moments. (Refer to Bending Moment chart for each model.)

  Should the resulting maximum bending moment exceed figures indicated on the chart, external guides, auxiliary carrier/s or a larger cylinder should be considered.

- Auxiliary Carrier Bending Moments

  The auxiliary carrier option (available on most models) increases load carrying capacity and bending moments. Auxiliary carriers can be ordered with or without an internal piston. (Auxiliary carriers without a piston have no internal cushion on the cylinder end closest to the auxiliary carrier.)

  IMPORTANT: When ordering, determine the working stroke, then the minimum distance required between carriers (dimension "D" in Auxiliary Carrier Bending Moments chart). When ordered, Tolomatic's configurator will calculate the overall length of the actuator.

NOTE: breakaway pressure will increase when using auxiliary carriers.

4 DETERMINE INTERNAL CUSHION CAPACITY

- Consult the Cushion Data chart for the model selected. The velocities listed on the cushion charts are final or cushion impact velocities. On applications where the internal cushions or bumpers are to be used, be sure the actual, final or impact velocity is known. If the velocity is not known, use of limit switches with valve deceleration circuits or shock absorbers should be considered. NOTE: The BC205 uses external bumpers in place of internal cushions, LS05 & LS10 do not have cushions or bumpers.
- Cross-reference the final velocity and weight of the load. If the intersection is below the diagonal lines, the internal cushions on the actuator may be used. If the point falls above the dashed diagonal line or if the velocity is not known, use deceleration circuits, external shock absorbers or select a larger cylinder with greater cushion capacity. On high-cyclic applications, use of external stops is strongly recommended.

5 DETERMINE TUBE SUPPORT REQUIREMENTS

- Consult the Tube Support chart for the model selected.
- Cross reference the load weight and maximum distance between supports.

6 CONSIDER OPTIONS

- Switches– dc Reed, Hall-effect or ac Triac

Band Cylinders and Linear Slides each have different standard features and options. Check the options section for the actuator you have selected.

- Shock Absorbers– if needed.
- Foot Mounting Kits
- Floating Mount Bracket – use when lack of parallelism occurs between the cylinder and an external guided and supported load.
- Single End Porting (BC3, BC4)
- Long Carrier (BC4)
- Proximity Sensors (LS)
- Dual 180° Carrier (BC3)

Application Guidelines

The following conditional statements are intended as general guidelines for use of Tolomatic actuators. Since all applications have their own specific operating requirements, consult Tolomatic, Inc. or your local Tolomatic distributor if an application is unconventional or if questions arise regarding the selection process.

CUSHION NEEDLE ADJUSTMENT (BC2, BC3, BC4, CC, SA, DP, TC ONLY)

Adjust the cushion needles in the cylinder heads carefully to obtain a smooth, hesitation free deceleration for your particular application. If there are questions on proper adjustment, please consult Tolomatic, Inc.

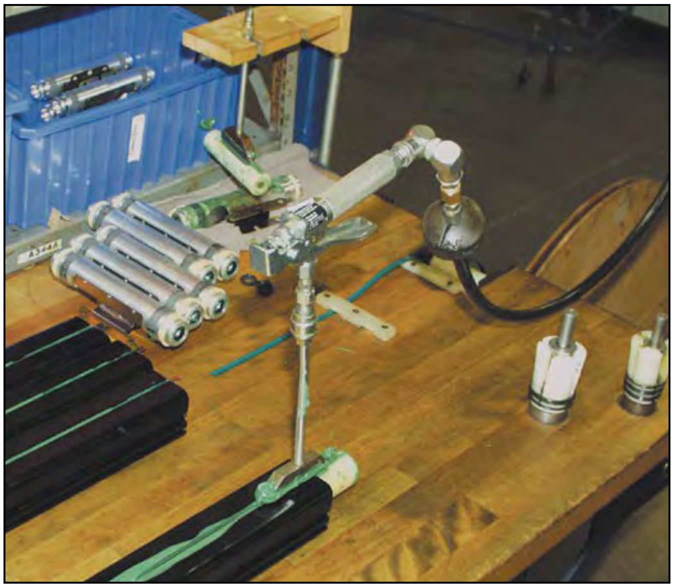

LUBRICATION GUIDELINES

All Tolomatic actuators (except Cable Cylinders) are prelubricated at the factory. To ensure maximum actuator life, the following guidelines should be followed.

- **Filtration**

  We recommend the use of dry, filtered air in our products. "Filtered air" means a level of 10 Micron or less. "Dry" means air should be free of appreciable amounts of moisture. Regular maintenance of installed filters will generally keep excess moisture in check.

- **External Lubricators (optional)**

  The factory prelubrication of Tolomatic actuators will provide optimal performance without the use of external lubrication. However, external lubricators can further extend service life of pneumatic actuators if the supply is kept constant.

  Oil lubricators, (mist or drop) should supply a minimum of 1 drop per 20 standard cubic feet per minute to the cylinder. As a rule of thumb, double that rate if water in the system is suspected. Demanding conditions may require more lubricant.

  If lubricators are used, we recommend a non-detergent, 20cP @ 140˚F 10-weight lubricant. Optimum conditions for standard cylinder operation are +32˚ to +150˚F (+0˚ to 65.5˚C).

  NOTE: Use of external lubricators may wash away the factory installed lubrication. External lubricants must be maintained in a constant supply or the results will be a dry actuator prone to premature wear.

- **Sanitary Environments**

  Oil mist lubricators must dispense "Food Grade" lubricants to the air supply. Use fluids with ORAL LD50 toxicity ratings of 35 or higher such as Multitherm® PG-1 or equivalent. Demanding conditions can require a review of the application.

FINAL VELOCITY CALCULATION

Velocity calculations for all rodless cylinders need to differentiate between final velocity and average velocity. For example: Stroking a 100-inch BC3 model in one second yields an average velocity of 100 inches per second. To properly determine the inertial forces for cushioning, it is important to know the final (or impact) velocity. Rodless cylinders accelerate and decelerate at each end of the stroke. Therefore this acceleration must be considered (see diagram).

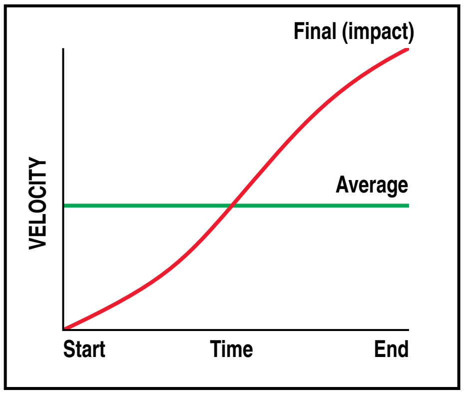

If final (or impact) velocity cannot be calculated directly, a reasonable guideline is to use 2 x average velocity.

BC2 Service Parts Ordering - ALL Sizes

Inch (U.S. Standard) SIZE	05	10	12	15	20	25
Aux. Carrier Assembly (w/piston) (each)	NA	0510-9057	0512-9057	0515-9057	0520-9057	0525-9057
Aux. Carrier Assembly (wo/piston) (each)	NA	0510-9095	0512-9095	0515-9095	0520-9095	0525-9095
Floating Mount Bracket Kit	0905-9115	0510-9007	0512-9007	0515-9007	0520-9007	0525-9007
Foot Mount Kit[1]	0905-9010	0510-9125	0512-9125	0515-9125	0520-9125	0525-9125
Shock Field Retrofit Kit – Heavy Duty[2,8]	NA	0510-9090	0512-9090	0515-9090	0520-9090	0525-9090
Shock Field Retrofit Kit – Light Duty[2,8]	NA	0510-9091	0512-9091	0515-9091	0520-9091	0525-9091
Shock Field Mount Kit (Hardware Only)[3,8]	NA	0510-9092	0512-9092	0515-9092	0520-9092	0525-9092
Adj. Shock Field Retrofit Kit – Heavy Duty[2]	NA	0510-9048	0512-9011	0515-9011	0520-9011	0525-9011
Adj. Shock Field Retrofit Kit – Light Duty[2]	NA	0510-9049	0512-9012	0515-9012	0520-9012	0525-9012
Adj. Shock Field Mount Kit (Hardware Only)[3]	NA	0510-9072	0512-9072	0515-9072	0520-9072	0525-9013
Tube Supports[4]	0905-1034	4510-1010	4512-1010	4515-1010	4520-1010	4525-1010
Repair Kits[5,6,7]	RKBC205NP	RKBC210NP	RKBC212NP	RKBC215NP	RKBC220NP	RKBC225NP

Metric SIZE	05	10	12	15	20	25
Aux. Carrier Assembly (w/piston) (each)	NA	4510-9057	4512-9057	4515-9057	4520-9057	4525-9057
Aux. Carrier Assembly (wo/piston) (each)	NA	4510-9095	4512-9095	4515-9095	4520-9095	4525-9095
Floating Mount Bracket Kit	4905-9115	4510-9007	4512-9007	4515-9007	4520-9007	4525-9007
Foot Mount Kit[1]	4905-9010	4510-9125	4512-9125	4515-9125	4520-9125	4525-9125
Shock Field Retrofit Kit – Heavy Duty[2,8]	NA	4510-9090	4512-9090	4515-9090	4520-9090	4525-9090
Shock Field Retrofit Kit – Light Duty[2,8]	NA	4510-9091	4512-9091	4515-9091	4520-9091	4525-9091
Shock Field Mount Kit (Hardware Only)[3,8]	NA	4510-9092	4512-9092	4515-9092	4520-9092	4525-9092
Adj. Shock Field Retrofit Kit – Heavy Duty[2]	NA	4510-9013	4512-9013	4515-9013	4520-9013	4525-9013
Adj. Shock Field Retrofit Kit – Light Duty[2]	NA	4510-9014	4512-9014	4515-9014	4520-9014	4525-9014
Adj. Shock Field Mount Kit (Hardware Only)[3]	NA	4510-9025	4512-9025	4515-9025	4520-9025	4525-9025
Tube Supports[4]	0905-1034	4510-1010	4512-1010	4515-1010	4520-1010	4525-1010
Repair Kits[5,6,7]	RKBC205TP(GP)	RKBC210TP(GP)	RKBC212TP(GP)	RKBC215TP(GP)	RKBC220TP(GP)	RKBC225TP(GP)

Service Parts Ordering NOTES:

[1] Foot Mount Kit contains two foot mount brackets and mounting hardware

[2] Shock Field Retrofit Kit contains one Shock Absorber and mounting hardware

[3] Shock Field Mount Kit contains one set of mounting hardware only

[4] A minimum of 2 (two) Tube Supports required per cylinder

[5] Repair Kit for 05 size contains O-rings, End Caps, Wear Strips, Band Inserts, Spring Clamps, Sealing Band, Dust Band and Shock Absorbing Pads

[6] Repair Kit for 10, 12, 15, 20 & 25 size contains End Caps, Bearing Rods, O-rings, Wear Rings, Cushion Seals, Band Inserts, Spring Clamps, Sealing Band and Dust Band.

[7] When ordering repair kits, specify stroke as "SK" then indicate the desired length in decimal inches after the order code indicated above. EXAMPLE: RKBC210SK10.00

[8] Standard end-of-stroke shock absorbers are designed to operate without the assistance of the standard band cylinder cushion. To ensure proper shock absorber performance, make sure the air cushion is disabled.

NA = Not Available

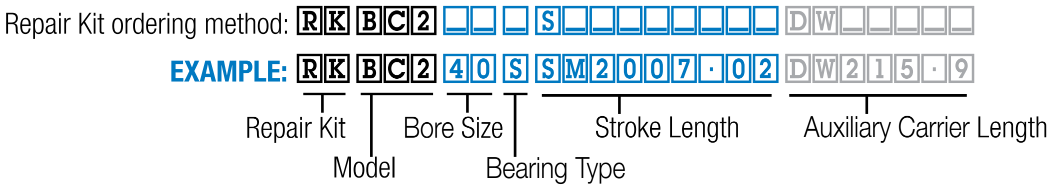

BC2 Switch Ordering - ALL Sizes

SWITCHES

To order field retrofit switch and hardware kits for all Tolomatic actuators:
Use SW (Then the model and bore size, and type of switch required)

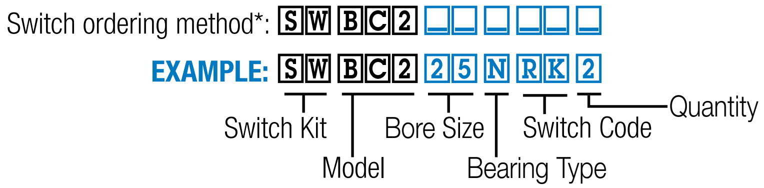
Switch ordering method*: S W B C 2 _ _ _ _ _ _

EXAMPLE: S W B C 2 2 5 N R K 2

Hardware and Form A Reed switch with 5 meter lead for 1.5" bore BC2 band cylinder

CONFIG. CODE ORDERING
Mounting Hardware & FE conn. included

DESCRIPTION	CODE
Switch Kit, Reed, Form C, 5m	BT
Switch Kit, Reed, Form C, Male Conn.	BM
Switch Kit, Reed, Form A, 5m	RT
Switch Kit, Reed, Form A, Male Conn.	RM
Switch Kit, Triac, 5m	CT
Switch Kit, Triac, Male Conn.	CM
Switch Kit, Hall-effect, Sinking, 5m	KT
Switch Kit, Hall-effect, Sinking, Male Conn.	KM
Switch Kit, Hall-effect, Sourcing, 5m	TT
Switch Kit, Hall-effect, Sourcing, Male Conn.	TM

NOTE: When kit is ordered female connector & all mounting hardware is included

BC2 Ordering - ALL Sizes

MODEL, BORE, STROKE

OPTIONS

BC2 10 NP SK100.250 DW6.0 TS3 FM2 SH2 BM2

MODEL & MOUNTING

BC2	BC2 Band Cylinder

BORE SIZE

05	0.50" *(12mm)*
10	1.00" *(25mm)*
12	1.25" *(32mm)*
15	1.50" *(40mm)*
20	2.00" *(50mm)*
25	2.50" *(63mm)*

MOUNTING & PORTS

NP	US standard mounting & NPT ports
TP†	Metric mounting with metric taper port
GP†	Metric mounting with metric parallel port

† The metric version provides metric tapped holes for mounting of the load to the carrier and of the actuator to mounting surfaces & metric ports

STROKE LENGTH & MOUNTING TYPE

SK __ .__	Stroke, enter desired stroke length in inches
SM† __ .__	Stroke, enter desired stroke length in millimeters

NOTE: Actuator mounting threads and mounting fasteners will be either inch or metric; depending on how stroke length is indicated.

SK = inch mounting
SM = metric mounting

MAXIMUM STROKE

	...SK	...SM
SIZE	in	*mm*
05	171	*4,343*
10	350	*8,890*
12	288	*7,315*
15	298	*7,569*
20	274	*6,959*
25	163	*4,140*

Not all codes listed are compatible with all options. Contact Tolomatic with any questions.

AUXILIARY CARRIER (BC2_14)

DW	Auxiliary carrier With piston & "D" distance
DO	Auxiliary carrier Without piston & "D" distance
_ _._ _	"D" Distance between carriers "D" Distance between carriers in inches (**SK**) or millimeters (**SM**)

(Same unit of measure as stroke length is required)

⊗ *Not available for 05 size*

MINIMUM "D" DISTANCE BETWEEN CARRIERS

	(DO) w/o Piston		(DW) w/ Piston	
	in	*mm*	in	*mm*
10	5.07	*129*	5.07	*129*
12	5.17	*131*	6.85	*174*
15	6.46	*164*	8.07	*205*
20	8.10	*206*	8.10	*206*
25	9.62	*244*	11.06	*281*

***When ordering auxiliary carrier option, enter the distance required between carriers. The configurator will calculate the overall length of the actuator.**

TUBE SUPPORTS (BC2_16)

TS_	Tube Support & number required

FOOT MOUNT (BC2_17)

FM_	Foot Mount & number required (1 or 2)

FLOATING MOUNT (BC2_18)

FL	Floating Mount Bracket

⊗ *Not compatible with shock absorbers*

PORTING OPTION

HDL	4-Ported Head - Left End
HDR	4-Ported Head - Right End
HDB	4-Ported Head - Both Ends

⊗ *Not available for 05 size*

SHOCK ABSORBERS (BC2_22)

SD_	Shock hardware Only and number required
SH_	Shock, Heavy duty and number required
SL_	Shock, Light duty and number required
***AD_**	Adjustable shock hardware Only and number required
***AH_**	Adjustable shock, Heavy duty and number required
***AL_**	Adjustable shock, Light duty and number required

⊗ *Not available for 05 size*

**NOTE: Adjustable Shock will reduce working stroke (see page BC2_22)*

SWITCHES (BC2_20)

TYPE		QUICK-DISCONNECT	CODE	QUANTITY	LEAD LENGTH
REED	Form A	QD	**RM**	*After code enter quantity desired*	5 meters
		no	**RT**		
	Form C	QD	**BM**		
		no	**BT**		
HALL-EFFECT	Sinking	QD	***KM**		
		no	***KT**		
	Sourcing	QD	***TM**		
		no	***TT**		
TRIAC		QD	**CM**		
		no	**CT**		

MDR Dual Magnet (Reed, Hall-effect, Triac)

* ⊗ *Not available for 05 size*

Tolomatic™
EXCELLENCE IN MOTION

BC3 RECIRCULATING BALL BEARING RODLESS CYLINDER

CONTENTS

BC3 BAND CYLINDER

ENDURANCE TECHNOLOGY℠
A Tolomatic Design Principle

Endurance Technology features are designed for maximum durability to provide extended service life.

The BC3 is the most capable pneumatic rodless cylinder in the industry today. Featuring durable stainless steel bands, a reliable recirculating ball bearing design and smooth, low breakaway pressure the BC3 is a great solution for applications with high load and bending moment requirements. Built-to-order in stroke lengths up to 205 inches.

FORMED END CAP WIPER SEAL

- Keeps contaminants from entering the sealing area
- Protects internal components
- Reduces maintenance while increasing productivity

SEALED BALL BEARING SYSTEM

- All bearing components covered by seal strip
- Bearing components are sealed and lubricated at the factory
- Assures maximum resistance to contamination

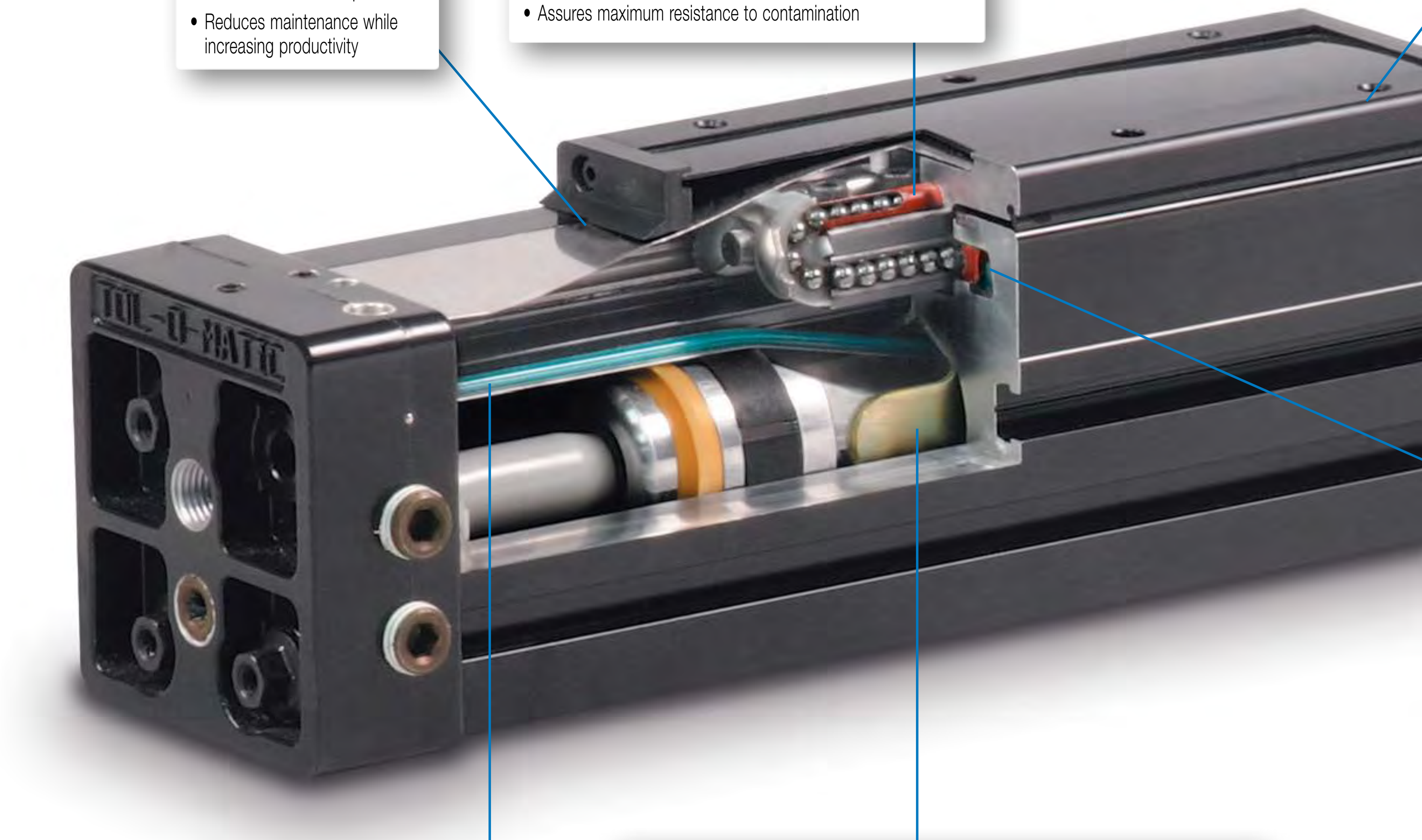

STAINLESS STEEL SEALING BAND SYSTEM

- Fatigue resistant stainless steel bands are specifically made to provide longer life and will not elongate, like elastomers
- Outer band keeps out contaminants for extended performance
- Inner band provides a smooth surface for less seal wear

FORMED STEEL PISTON BRACKET

- Provides maximum strength at major stress points
- Heat treated carbon steel withstands the toughest dynamic forces
- Strongest bracket design in the industry assures long life with less maintenance

TOLOMATIC…THE RODLESS CYLINDER LEADER

LOAD-BEARING CARRIER DESIGN

- Load and piston are independent - piston floats, resulting in less friction and longer seal life
- Recirculating ball bearing system guides and supports load for consistent long term performance
- Constant level of friction is maintained even when load orientation changes

ADJUSTABLE CUSHIONS

- Adjustable cushions are standard, not optional
- Easy screw adjustment for end-of-stroke deceleration
- Protects actuator and load from damage

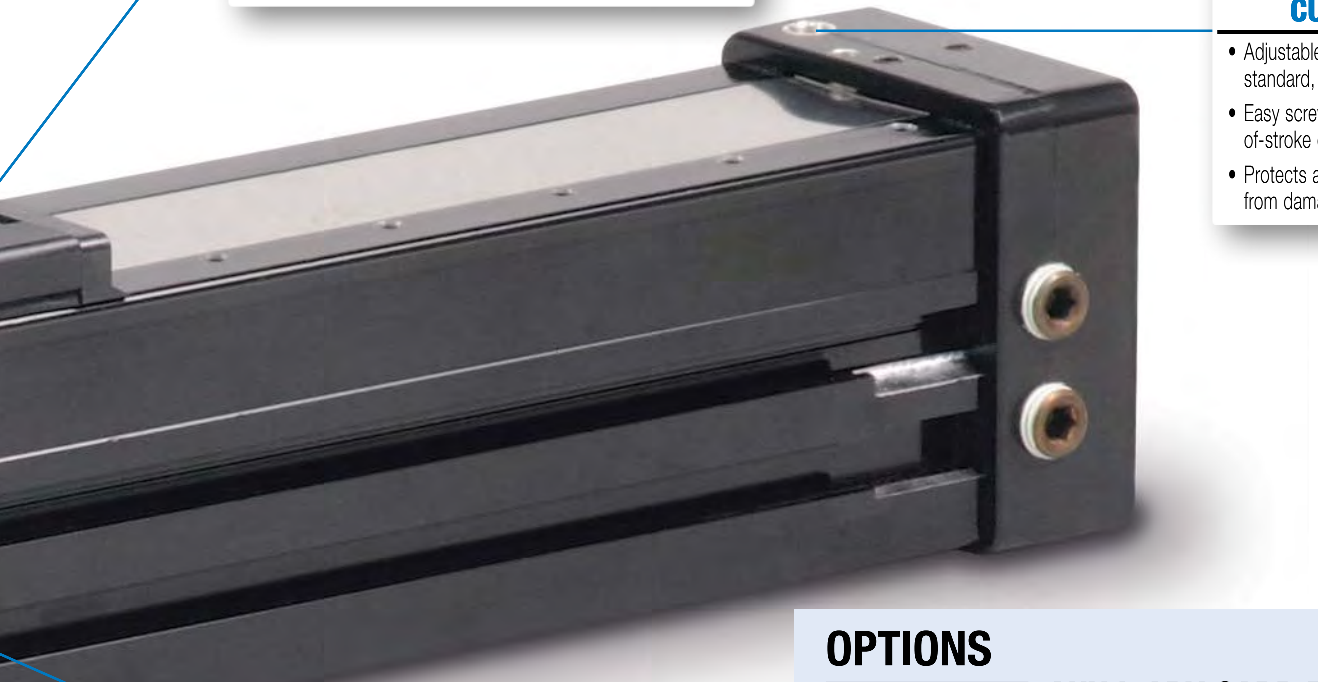

PATENTED WEDGE BEARING SYSTEM

- Bearing surfaces adjusted at the factory for optimum pre-load
- Bearing surfaces adjusted by and supported by a steel wedge assuring long term stability

OPTIONS

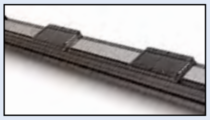

AUXILIARY CARRIER

- Substantially higher load capacity
- Substantially higher bending moment capacity

DUAL 180° CARRIER

- Substantially higher load capacity
- Substantially higher bending moment capacity

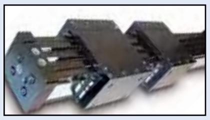

AUXILIARY DUAL 180°

- Highest load capacity
- Highest bending moment capacity

TUBE SUPPORT MOUNTS

- Used for intermediate support

FOOT MOUNTS

- For end mounting of band cylinder

SHOCK ABSORBERS

- Smooth deceleration, higher productivity
- Allows increased operating speed
- Self-compensates for load or speed changes
- Minimizes impact load to equipment
- Adjustable position shocks available

SWITCHES

- **Available in Reed, Hall-effect and Triac**
- **15ft. cable with flying leads; available with quick-disconnect couplers**

BC3 Recirculating Ball Bearing Rodless Cylinder

APPLICATIONS

Material Handling

Automatic sorting of products on conveyors.

Customer Challenge:

A manufacturer of sorting equipment had created some in-house automation solutions on their sorting equipment but they could not achieve the speed or reliability to keep up with their distribution requirements. They needed to speed up production and find a way to sort to more locations with limited floor space.

Tolomatic Solution:

A BC3 rodless pneumatic cylinder with was selected for this application because of their space-saving characteristics. The BC3 cylinder sits parallel over the top of the conveyor and is fitted with a paddle. The BC3 cylinder moves the paddle which pushes product both directions to different conveyors. Speed requirements of 30 in/sec were achieved easily achieved.

Result:

The rodless approach provided long-lasting durability for reliable performance at the required speed. The customer achieved flexibility on the number of products they could sort and increased the number of sorting locations maximizing their limited floor space. Most important, they were able to meet their distribution demands. The customer ordered 300 units for a total of $400,000.

Material Handling

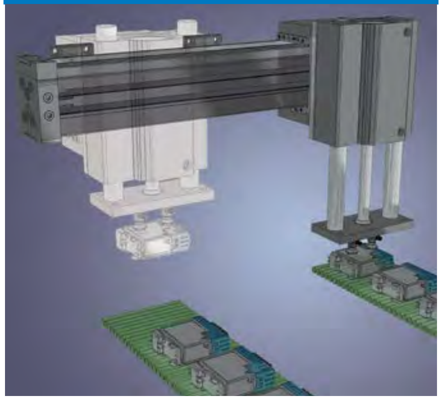

A pick and place application for moving product between conveyors.

Customer Challenge:

A manufacturer of consumer electronic equipment needed a method to move finished product from one conveyor to another quickly without damage or waste.

Application Requirements:

- Fast response, throughput of 20 products per minute
- Consistent positioning
- End-of-stroke adjustment to accommodate varying product lines

Tolomatic Solution:

This side mounted BC3D Band Cylinder with dual 180° option provides the motion along the X axis and support for the PB2 rod cylinder slide which provides the Y axis motion. In this application dual vacuum cups are used, however they are often replaced with a gripper unit with custom tooled fingers for product that does not present a smooth flat surface.

Result:

This continuing customer is pleased with the durability, price and delivery that the BC3 and PB2 actuators manufactured by Tolomatic provide.

Material Handling

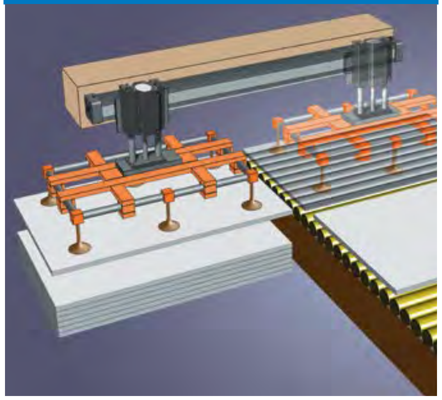

Vacuumized sheet transfer application.

Customer Challenge:

A manufacturer of battery chargers needed a method of taking sheet metal off of pallets and placing onto the assembly line. Speed is critical and end-of-stroke position must be consistent, thus, Tolomatic pneumatic products were chosen for this system.

Application Requirements:

- Fast response, 1 part must be reoriented and moved each 3 seconds
- Movement from end-of-stroke to end-of-stroke with consistent positioning
- Low cost
- End-of-stroke adjustment

Tolomatic Solution:

This application uses a Tolomatic PB2 Rod Cylinder Slide, attached to a BC3 Band Cylinder with adjustable shocks. This actuator assembly moves the vacuum grid attachment that holds the sheet metal.

Result:

The BC3 and PB2 has long-lasting durability for reliable performance at the required speed. This continuing customer is pleased with the price and delivery that Tolomatic provides.

BC3 Recirculating Ball Bearing Rodless Cylinder

PERFORMANCE

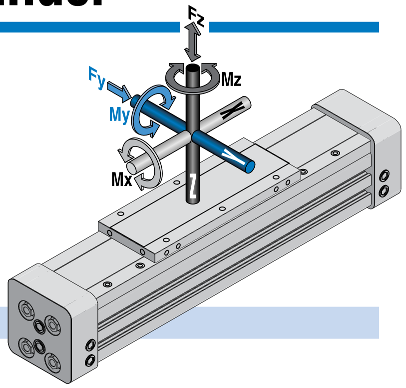

THEORETICAL FORCE vs PRESSURE

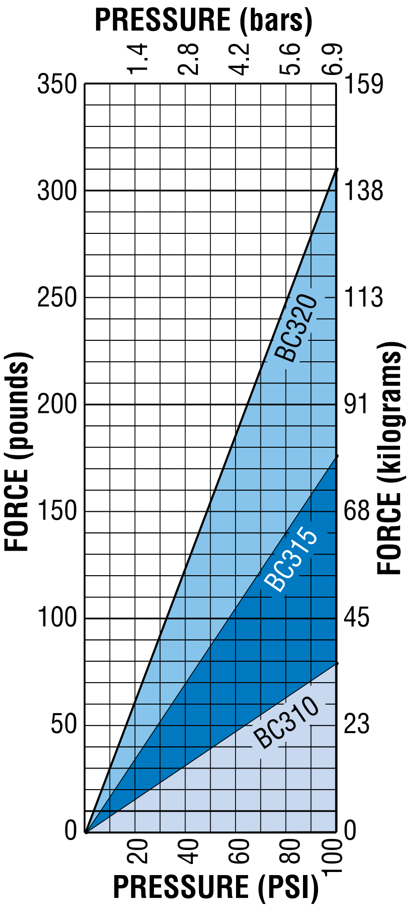

BENDING MOMENTS, LOAD

STANDARD ACTUATOR

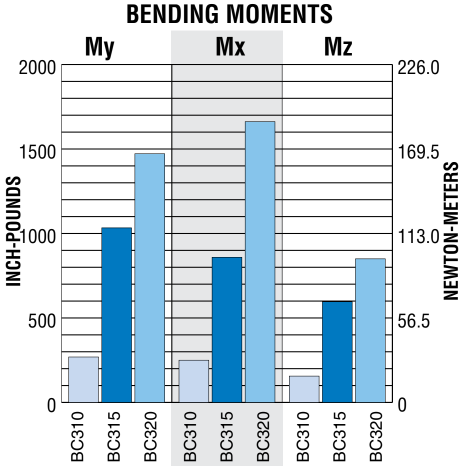

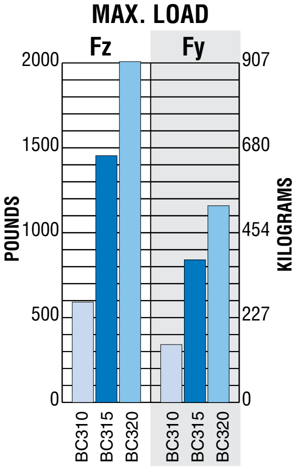

*AUXILIARY CARRIER & DUAL 180° CARRIER** OPTIONS*

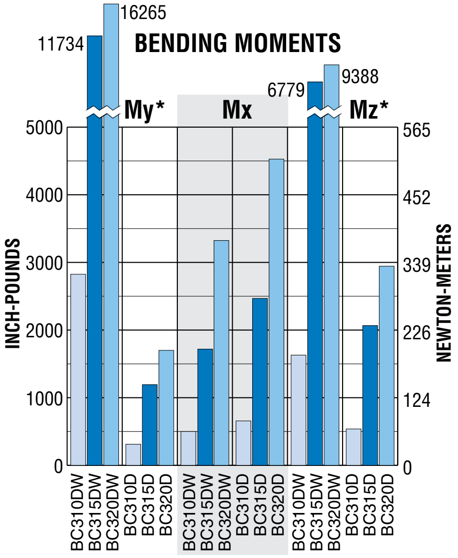

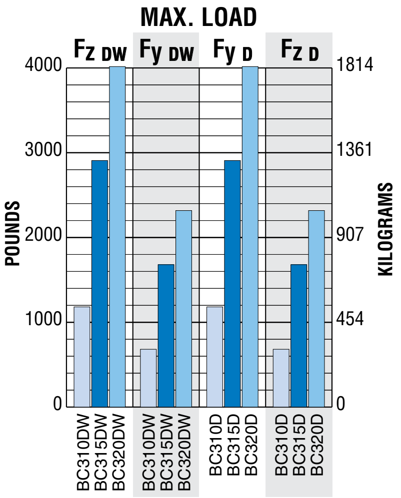

*Auxiliary carrier bending moments indicated are at minimum center to center distance. Additional My + Mz load capacity can be obtained by increasing "D" dimension. Refer to auxiliary carrier data on page BC3_5.

**Dual 180° carrier bending moments are not an exact comparison with other types of carriers. See page BC3_5.

BC310 Band Cylinder

PERFORMANCE

BC310

BC310 OPTIONS	Page
Auxiliary Carrier	BC3_16
Auxiliary Dual 180° Carrier	BC3_17
Dual 180° Carrier	BC3_14
Foot Mounts	BC3_13
Shock Absorbers	BC3_21
Switches	BC3_19
Tube Supports	BC3_12
MORE INFORMATION	**Page**
Application Guidelines	BC3_25
Cushion Needle Adjustment	BC3_25
Ordering	BC3_28
Selection	BC3_24
STANDARD FEATURE	**Page**
Single End Porting	BC3_18

CUSHION DATA

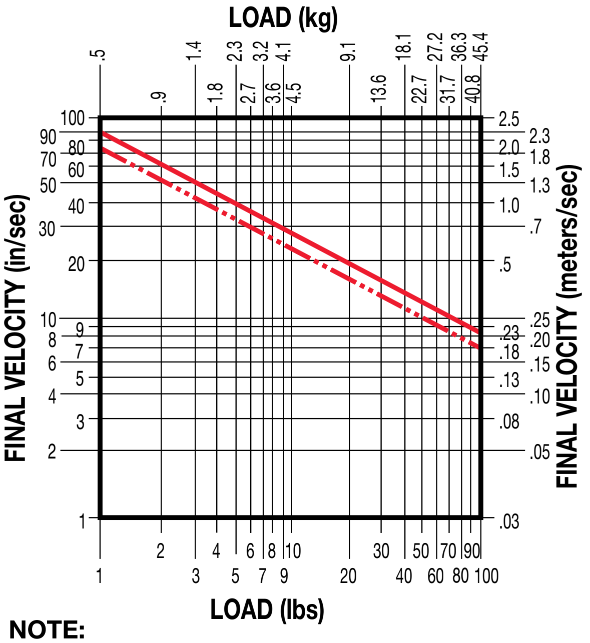

NOTE:

━━━ Max. for any application

─··─··─ Max. for continuously cycled application

THEORETICAL FORCE vs PRESSURE

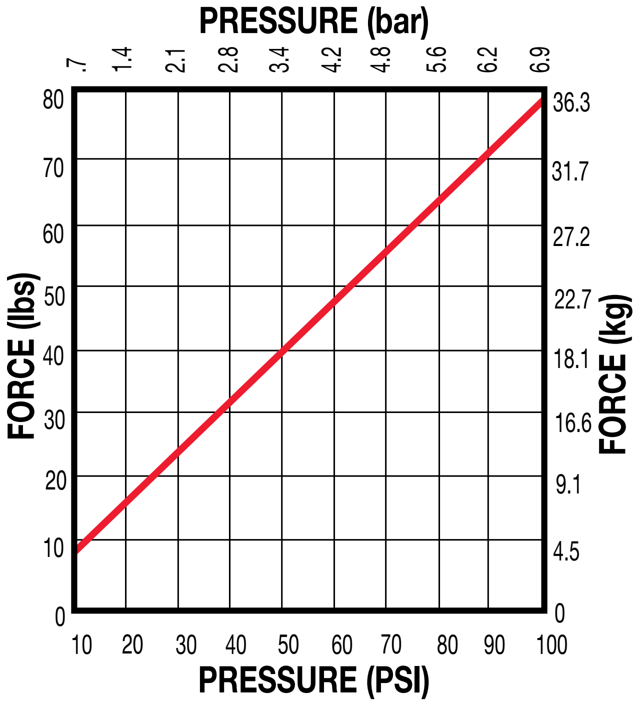

TUBE SUPPORT REQUIREMENTS

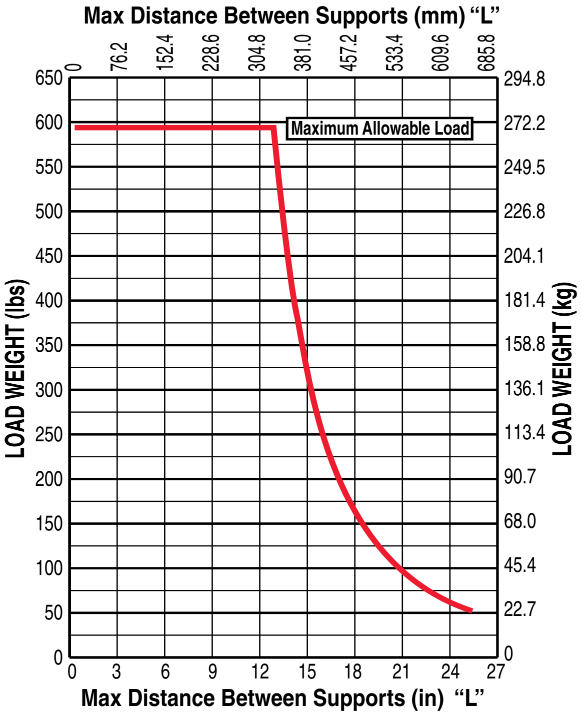

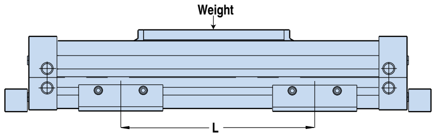

BC310 Band Cylinder

DIMENSIONS

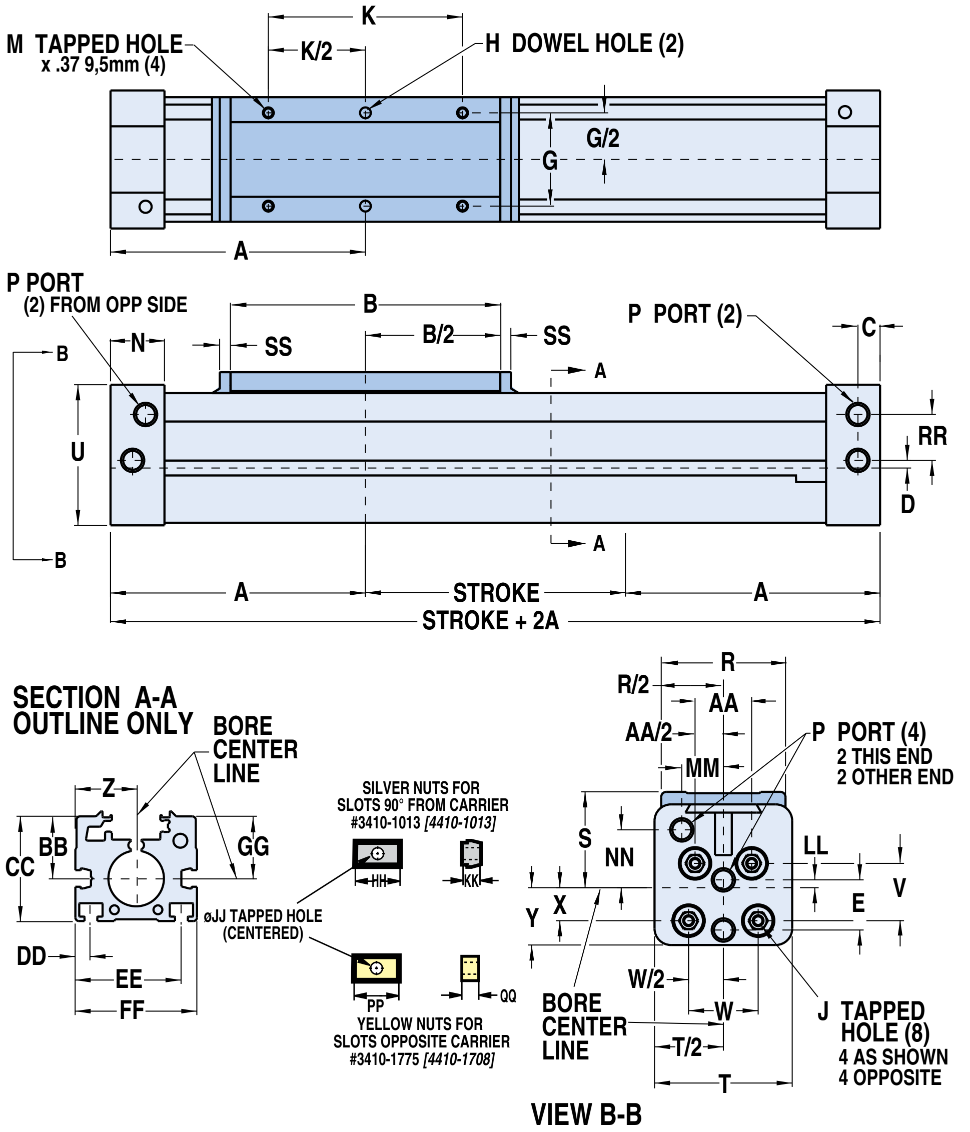

	MODELS	
	U.S Standard	Metric
A	3.94	100.0
B	3.67	93.3
C	.45	11.4
D	.047	1.19
E	.611	15.52
G	1.781	45.24
H*	.252/.251 x .25	6.045/6.020 x 6.4
J	10-24 x .43	M5-0.8 x 11.0
K	2.250	57.15
M	1/4-20	M6-1.0
N	1.00	25.4
P	1/8-27 NPT	**TP** 1/8-28 BSPT **GP** 1/8-28 BSPP
R	2.16	54.8
S	1.54	39.1
T	2.19	55.6
U	2.17	55.1
V	.750	19.05
W	1.250	31.75
X	.330	8.38
Y	.76	19.3
Z	1.094	27.79
AA	1.063	27.00
BB	1.12	28.45
CC	1.88	47.8
DD	.266	6.76
EE	1.922	48.82
FF	2.19	55.6
GG	1.12	28.45
HH	.66	16.8
JJ	10-24	M5-0.8
KK	.25	6.4
LL	.142	3.61
MM	.547	13.89
NN	.890	22.6
PP	.75	19.1
QQ	.188	4.8
RR	.845	21.46
SS	.203	5.2
	INCHES	MILLIMETERS

*DOWEL PINS ⌖ .003 Ⓜ

⌖ .076 Ⓜ

SPECIFICATIONS

BC310 BENDING MOMENTS AND LOAD

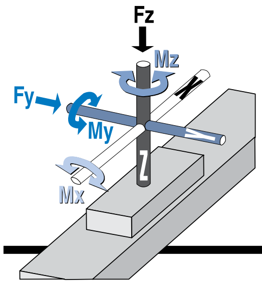

	BORE SIZE	MAX. BENDING MOMENT			MAX. LOAD	
		My	Mx	Mz	Fz	Fy
U.S.	1.00 in	269 in-lbs	250 in-lbs	156 in-lbs	591 lbs	341 lbs
Metric	*25 mm*	*30.4 N-m*	*28.2 N-m*	*17.9 N-m*	*268.1 kg*	*154.7 kg*

	BORE SIZE	WEIGHT		MAX. STROKE LENGTH**	MAX. PRESSURE	TEMPERATURE RANGE
		BASE	PER UNIT OF STOKE			
U.S. Standard	1.00 in	2.71 lbs	0.23 lbs/in	205 in	100 PSI	20° to 140° F
Metric	*25 mm*	*1.23 kg*	*0.0041 kg/mm*	*5207 mm*	*6.895 bar*	*-7° to 60° C*

**For longer strokes, alternate materials, mounting and/or fasteners – consult Tolomatic

BC315 Band Cylinder

PERFORMANCE

BC315

BC315 OPTIONS	Page
Auxiliary Carrier	BC3_16
Auxiliary Dual 180° Carrier	BC3_17
Dual 180° Carrier	BC3_14
Foot Mounts	BC3_13
Shock Absorbers	BC3_21
Switches	BC3_19
Tube Supports	BC3_12
MORE INFORMATION	**Page**
Application Guidelines	BC3_25
Cushion Needle Adjustment	BC3_25
Ordering	BC3_28
Selection	BC3_24
STANDARD FEATURE	**Page**
Single End Porting	BC3_18

CUSHION DATA

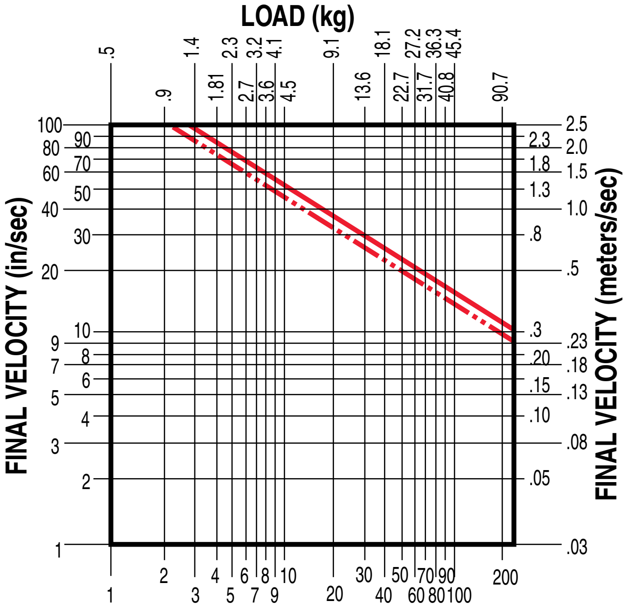

NOTE:
- Max. for any application
- Max. for continuously cycled application

THEORETICAL FORCE vs PRESSURE

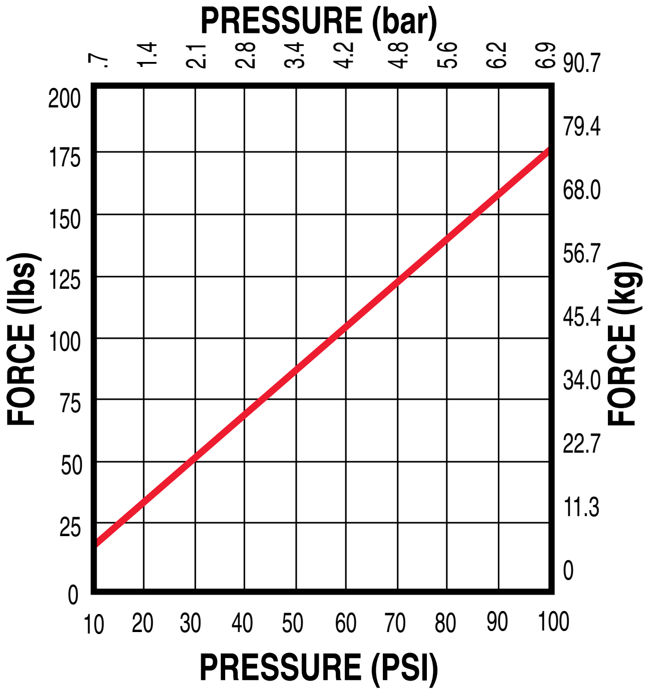

TUBE SUPPORT REQUIREMENTS

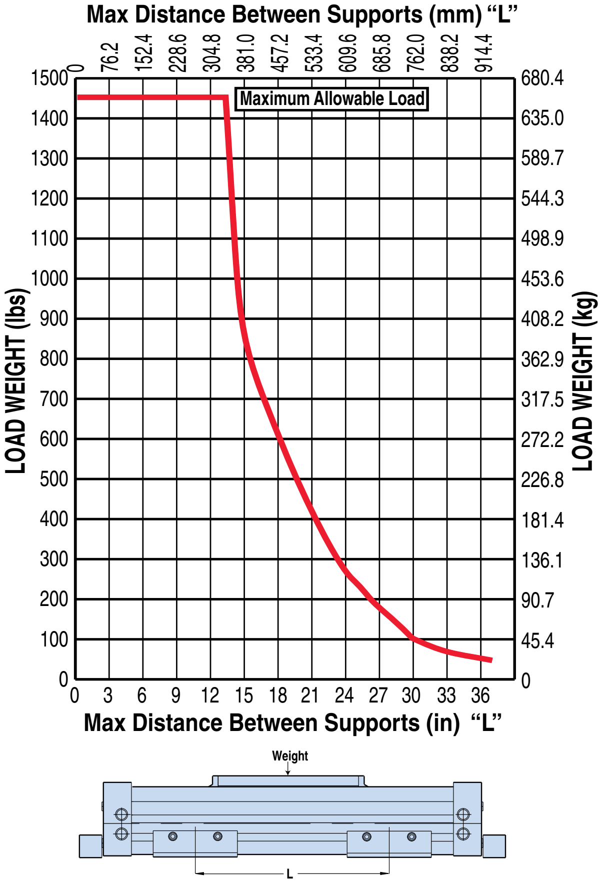

BC315 Band Cylinder

DIMENSIONS

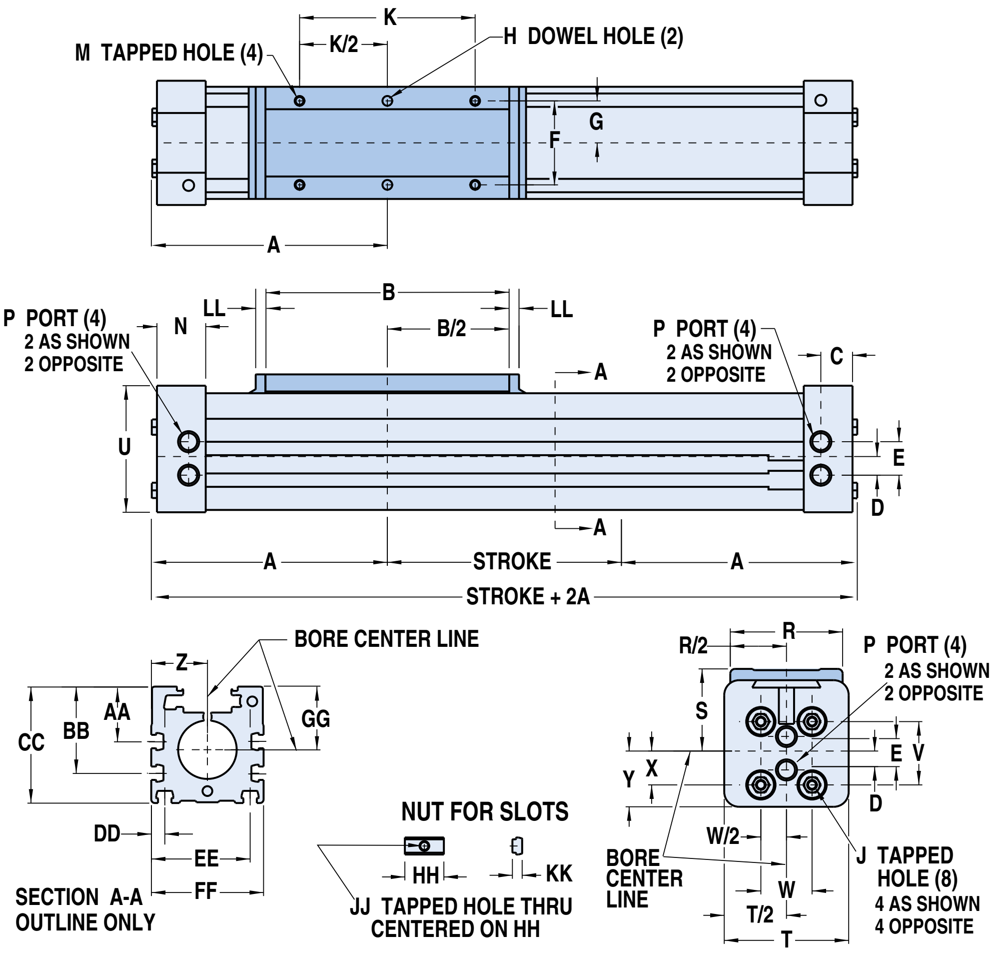

	MODELS	
	U.S. Std.	Metric
A	5.93	150.7
B	6.25	158.8
C	.84	21.3
D	.48	12.2
E	.86	21.8
F	2.156	54.76
G	1.078	27.38
H*	.252-.251 x .25	6.045-6.020 x 6.4
J	1/4-20 x .47	M6-1 x 12
K	4.500	114.30
M	1/4-20 X .44	M6- x 11
N	1.27	32.3
P	1/4-18 NPT	**TP** 1/4-19 BSPT **GP** 1/4-19 BSPP
R	2.88	73.0
S	2.109	53.57
T	3.19	81.0
U	3.25	82.6
V	1.625	41.28
W	1.313	33.35
X	.875	22.23
Y	1.46	37.1
Z	1.44	36.5
AA	1.41	35.81
BB	2.22	56.38
CC	2.99	75.95
DD	.35	8.9
EE	2.53	64.3
FF	2.88	73.0
GG	1.62	41.15
HH	.75	19.1
JJ	1/4-20	M6-1
KK	.25	6.4
LL	.25	6.4
	INCHES	MILLIMETERS

*DOWEL PINS ⌖ .003 Ⓜ ⌖ .076 Ⓜ

SPECIFICATIONS

BC315 BENDING MOMENTS AND LOAD

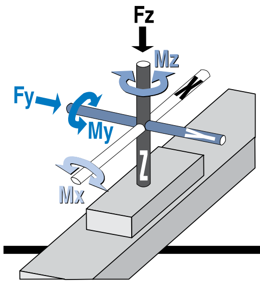

	BORE SIZE	MAX. BENDING MOMENT			MAX. LOAD	
		My	Mx	Mz	Fz	Fy
U.S.	1.50 in	1033 in-lbs	859 in-lbs	596 in-lbs	1454 lbs	840 lbs
Metric	*40 mm*	*116.7 N-m*	*97.1 N-m*	*67.3 N-m*	*659.5 kg*	*381.0 kg*

	BORE SIZE	WEIGHT		MAX. STROKE LENGTH**	MAX. PRESSURE	TEMPERATURE RANGE
		BASE	PER UNIT OF STOKE			
U.S. Standard	1.50 in	10.94 lbs	0.53 lbs/in	202 in	100 PSI	20° to 140° F
Metric	*40 mm*	*4.96 kg*	*0.0095 kg/mm*	*5130 mm*	*6.895 bar*	*-7° to 60° C*

**For longer strokes, alternate materials, mounting and/or fasteners – consult Tolomatic

BC320 Band Cylinder

PERFORMANCE

BC320

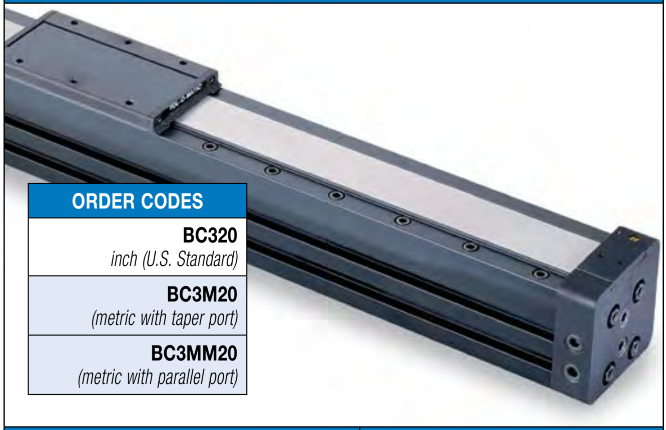

ORDER CODES

BC320
inch (U.S. Standard)

BC3M20
(metric with taper port)

BC3MM20
(metric with parallel port)

BC320 OPTIONS	Page
Auxiliary Carrier	BC3_16
Auxiliary Dual 180° Carrier	BC3_17
Dual 180° Carrier	BC3_14
Foot Mounts	BC3_13
Shock Absorbers	BC3_21
Switches	BC3_19
Tube Supports	BC3_12
MORE INFORMATION	**Page**
Application Guidelines	BC3_25
Cushion Needle Adjustment	BC3_25
Ordering	BC3_28
Selection	BC3_24
STANDARD FEATURE	**Page**
Single End Porting	BC3_18

CUSHION DATA

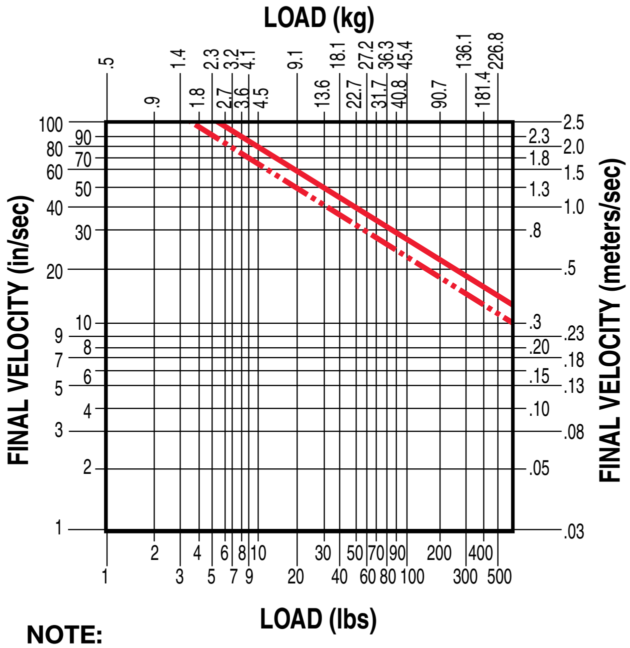

NOTE:
— Max. for any application
–··–··– Max. for continuously cycled application

THEORETICAL FORCE vs PRESSURE

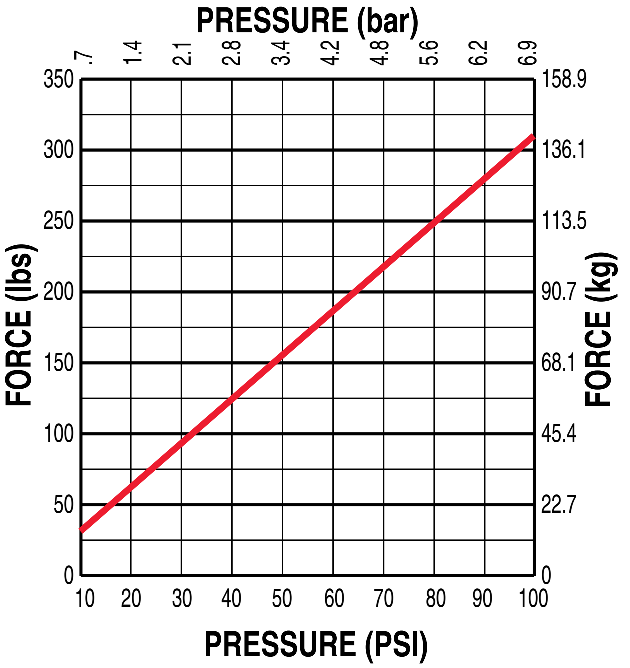

TUBE SUPPORT REQUIREMENTS

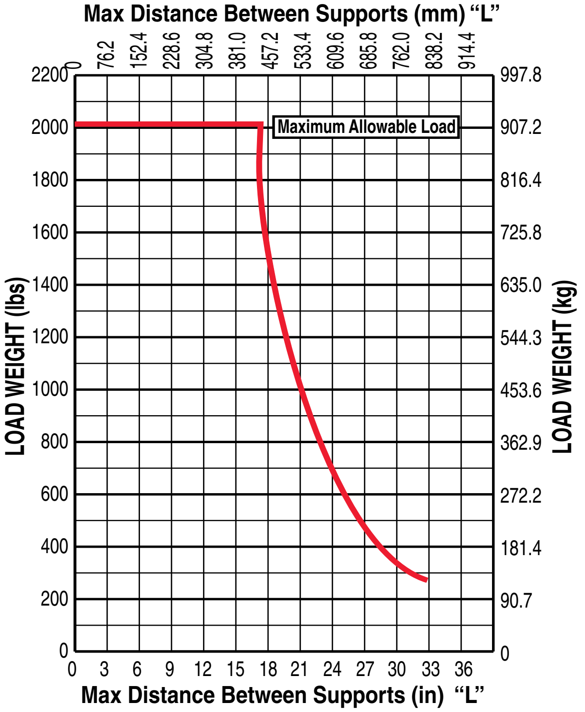

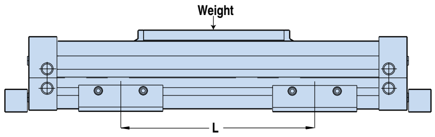

BC320 Band Cylinder

DIMENSIONS

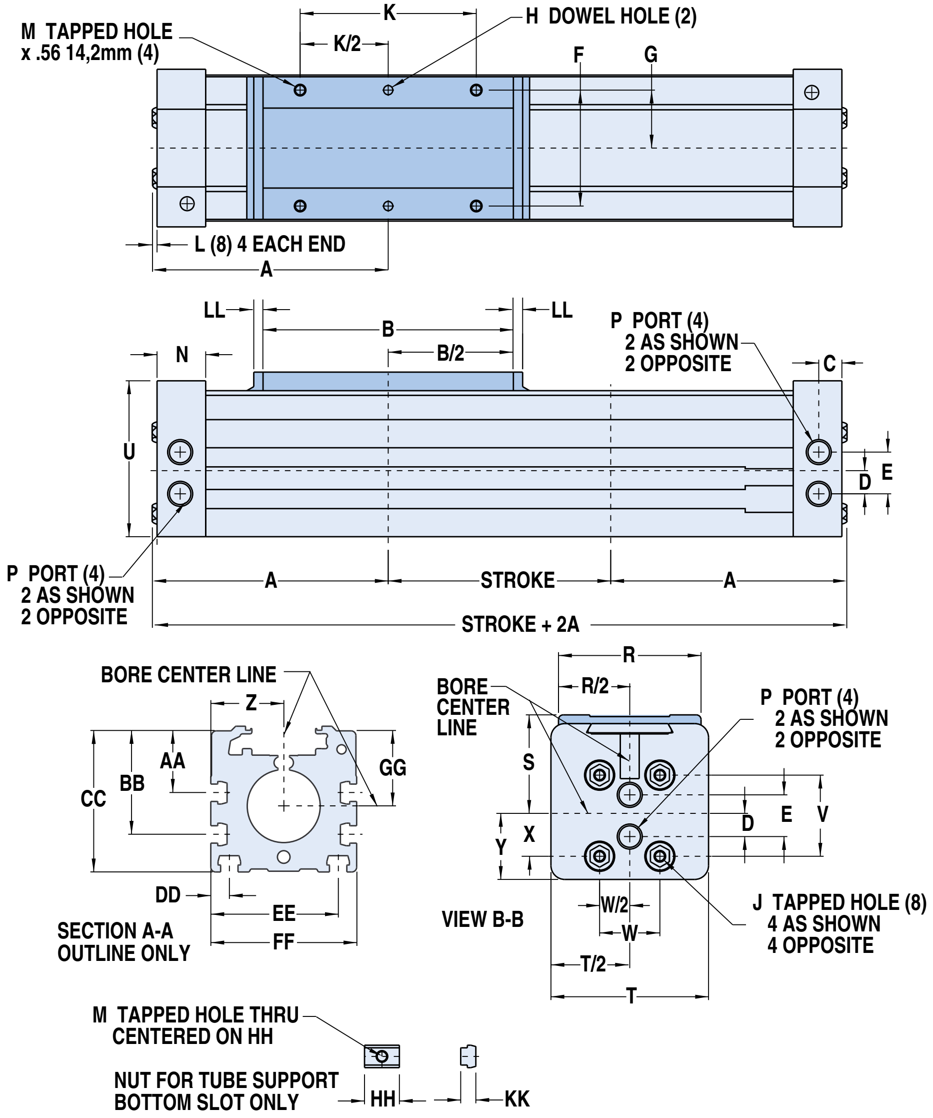

	MODELS	
	BC320	**BC3M/MM20**
A	6.27	159.0
B	6.75	171.5
C	0.625	15.88
D	0.625	15.88
E	1.125	28.58
F	3.125	79.38
G	1.563	39.70
H*	.252/.251 x .25	6.045/6.020 x 6.4
J	5/16-18 x .88	M8-1.25 x 22
K	4.750	120.65
L	0.063	1.60
M	5/16-18	M8-1.25
N	1.31	33.3
P	3/8-18 NPT	TP 3/8-19 BSPT GP 3/8-19 BSPP
R	3.84	97.5
S	2.663	67.64
T	4.25	108.0
U	4.20	106.7
V	2.188	55.58
W	1.625	41.28
X	1.156	29.36
Y	1.78	45.2
Z	1.969	50.01
AA	1.67	42.4
BB	2.80	71.0
CC	3.81	96.7
DD	0.500	12.70
EE	3.438	87.33
FF	3.94	100.1
GG	2.03	51.6
HH	0.94	23.9
JJ	5/16-18	M8-1.25
KK	.41	10.4
LL	.25	6.4
	INCHES	**MILLIMETERS**

SPECIFICATIONS

BC320 BENDING MOMENTS AND LOAD

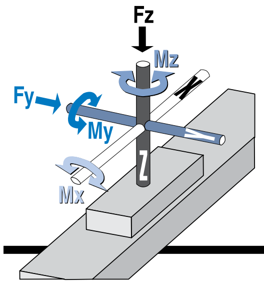

	BORE SIZE	MAX. BENDING MOMENT			MAX. LOAD	
		My	Mx	Mz	Fz	Fy
U.S.	2.00 in	1472 in-lbs	1662 in-lbs	850 in-lbs	2008 lbs	1159 lbs
Metric	*50 mm*	*166.3 N-m*	*187.8 N-m*	*96.0 N-m*	*910.8 kg*	*525.77 kg*

*DOWEL PINS ⌖ .003 Ⓜ

⌖ .076 Ⓜ

	BORE SIZE	WEIGHT		MAX. STROKE LENGTH**	MAX. PRESSURE	TEMPERATURE RANGE
		BASE	PER UNIT OF STOKE			
U.S. Standard	2.00 in	17.00 lbs	0.86 lbs/in	142 in	100 PSI	20° to 140° F
Metric	*50 mm*	*7.71 kg*	*0.0154 kg/mm*	*3606 mm*	*6.895 bar*	*-7° to 60° C*

**For longer strokes, alternate materials, mounting and/or fasteners – consult Tolomatic

BC3 TUBE SUPPORTS - All Sizes

TUBE SUPPORT

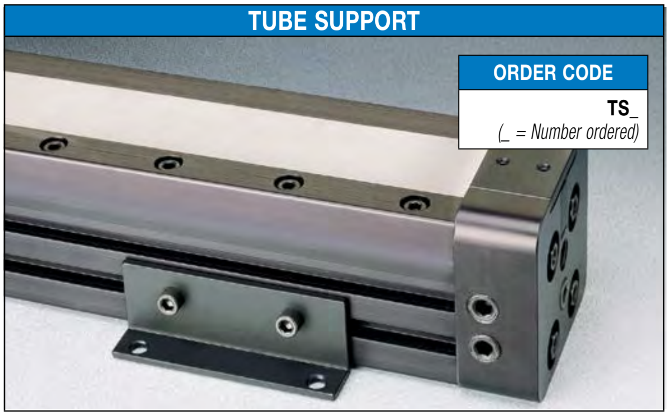

ORDER CODE

TS_

(_ = Number ordered)

For intermediate support, tube support brackets can be mounted to the BC3 model. Made of black-anodized aluminum, the brackets are attached to the bottom and sides of the cylinder tube with rail nuts. The number of tube support brackets required and their placement depends on the overall length of the BC3 model and the load weight being moved and supported. Refer to the tube support data chart below. Note: Switches cannot be mounted on the same face of the actuator as tube supports.

PERFORMANCE

TUBE SUPPORT REQUIREMENTS

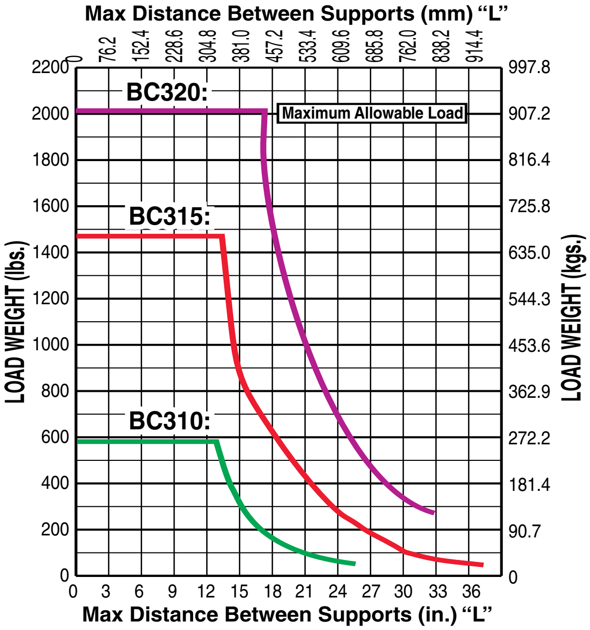

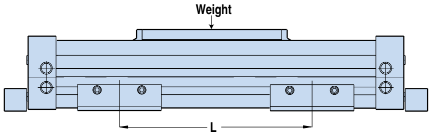

DIMENSIONS

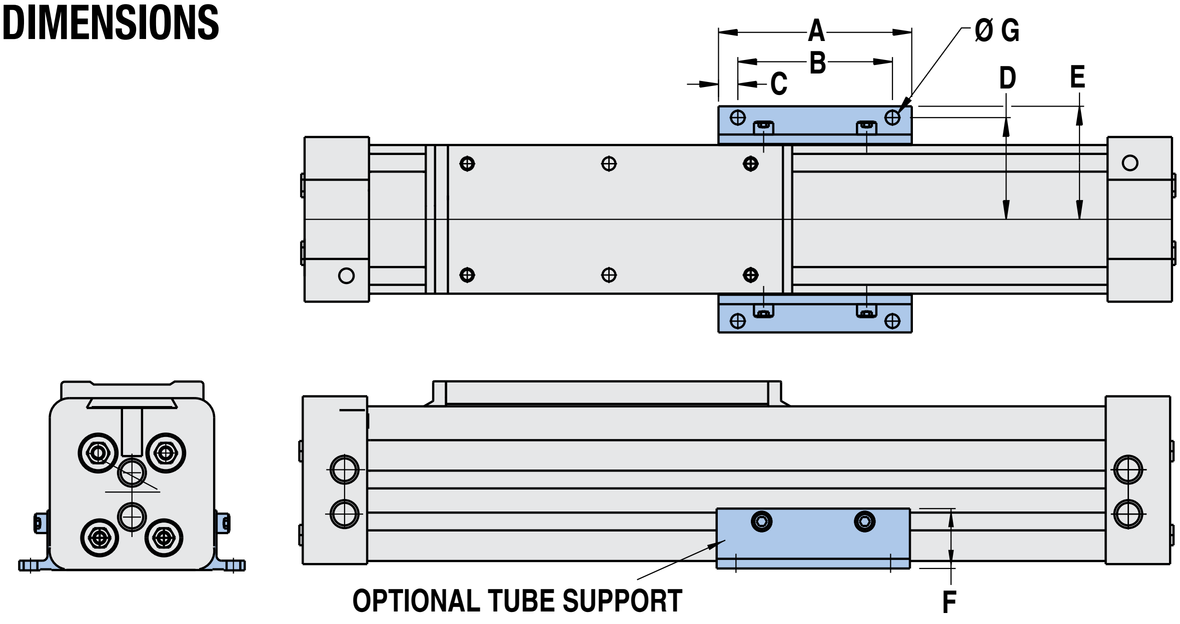

	BORE SIZE	A	B	C	D	E	F	G
10	1.00	2.75	2.250	0.25	1.53	1.76	1.09	0.206
15	1.50	3.75	3.000	0.38	1.97	2.19	1.16	0.266
20	2.00	4.00	3.375	0.31	2.56	2.84	1.50	0.328

Dimensions in inches

	BORE SIZE	A	B	C	D	E	F	G
10	*25*	*69.85*	*57.15*	*6.4*	*38.9*	*44.7*	*27.7*	*5.232*
15	*40*	*95.30*	*76.20*	*9.7*	*50.0*	*55.6*	*29.5*	*6.756*
20	*50*	*101.60*	*85.73*	*7.9*	*65.0*	*72.1*	*38.1*	*8.331*

Dimensions in millimeters

BC3 FOOT MOUNT KIT - All Sizes

FOOT MOUNT KIT

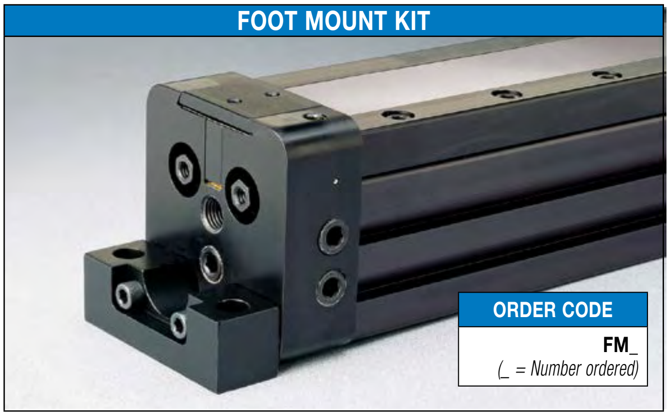

ORDER CODE

FM_

(_ = Number ordered)

Foot mounts are an option on BC3 Series Band Cylinders when an application requires the mounting to be different than flush. They may be specified on one or both ends of the cylinder.

DIMENSIONS

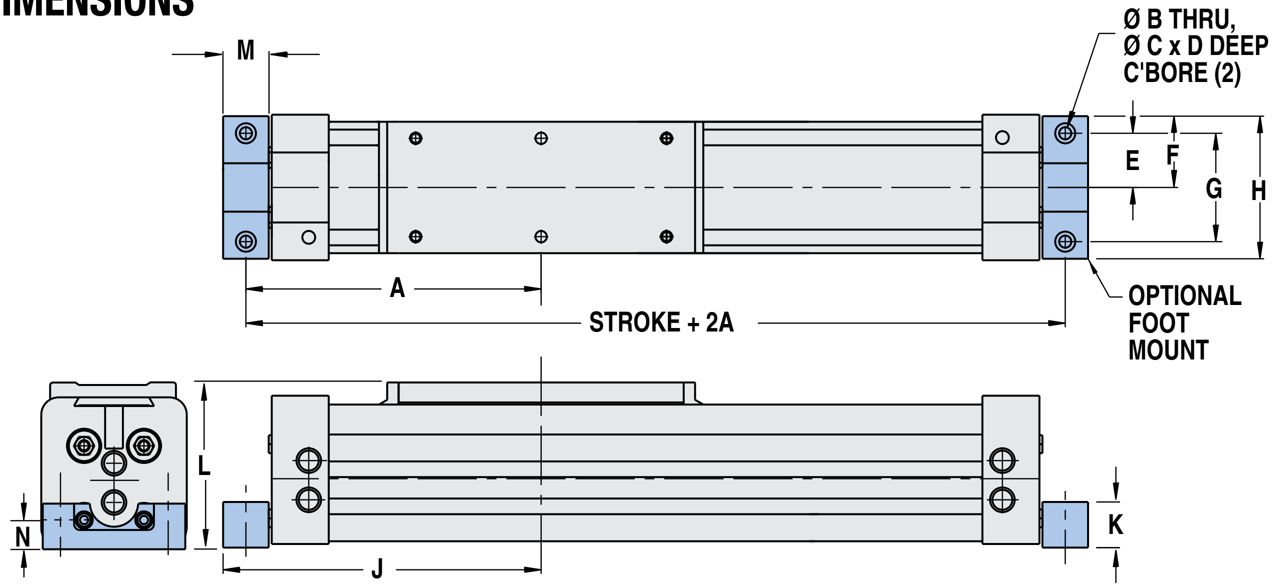

BORE SIZE		A	B	C	D	E	F	G	H	J	K	L	M	N
10	1.00	4.31	Ø.206	Ø .38	0.22	0.906	1.095	1.812	2.19	4.69	0.88	2.44	0.75	0.574
15	1.25	6.43	Ø.266	Ø .44	0.28	1.188	1.560	2.375	3.13	6.93	1.00	3.63	1.00	0.641
20	1.50	6.80	Ø.328	Ø .53	0.34	1.500	2.000	3.000	4.00	7.30	1.13	4.53	1.00	0.719

Dimensions in inches

BORE SIZE		A	B	C	D	E	F	G	H	J	K	L	M	N
10	25	109.5	Ø 5.23	Ø 9.7	5.6	23.01	27.8	46.02	55.6	119.1	22.4	62.0	19.1	14.6
15	32	163.4	Ø 6.76	Ø 11.2	7.1	30.18	39.7	60.33	79.4	176.1	25.4	92.2	25.4	16.3
20	40	172.7	Ø 8.33	Ø 13.5	8.6	38.10	50.8	76.20	101.6	185.4	28.7	115.1	25.4	18.3

Dimensions in millimeters

BC3 DUAL 180° CARRIER - All Sizes

DUAL 180° CARRIER

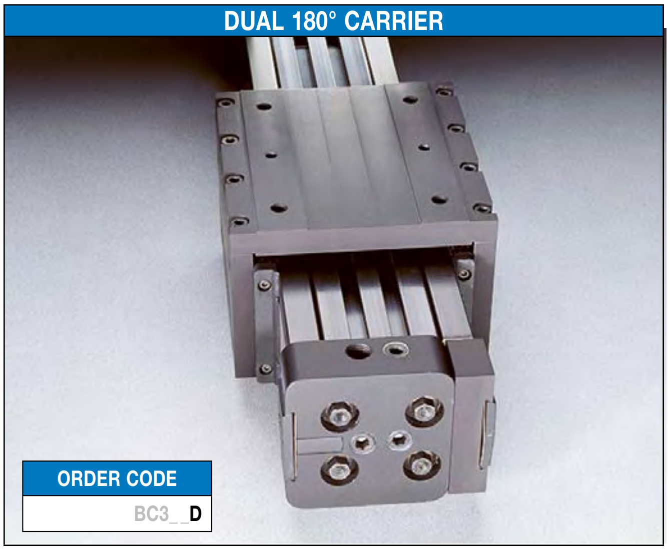

ORDER CODE

BC3_ _D

DUAL 180˚ CARRIER

The Dual 180˚ Carrier option may be used when load factors exceed those of a single carrier actuator. This option allows the load to be rotated 90˚ from the cylinder's carrier providing an additional load bearing mounting surface.

NOTE: The Dual 180˚ Carrier option requires its own proprietary tube supports and foot mounts. See dimensional information below. Breakaway pressure will increase when using the Dual 180˚ Carrier option.

PERFORMANCE

BC3D (DUAL 180° CARRIER) BENDING MOMENTS AND LOAD

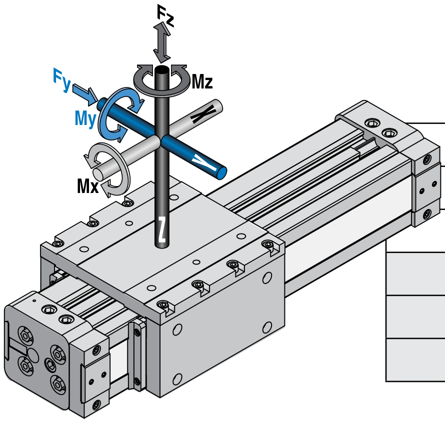

	BORE SIZE	MAX. BENDING MOMENT			MAX. LOAD	
		My	Mx	Mz	Fz	Fy
BC310D	1.00 in.	312 in.-lbs.	657 in.-lbs.	538 in.-lbs.	1182 lbs.	682 lbs.
BC315D	1.50 in.	1192 in.-lbs.	2468 in.-lbs.	2066 in.-lbs.	2908 lbs.	1680 lbs.
BC320D	2.00 in.	1700 in.-lbs.	4527 in.-lbs.	2944 in.-lbs.	4016 lbs.	2318 lbs.
BC310D	*25mm*	*35.3 N-m*	*74.2 N-m*	*60.8 N-m*	*536.1 kgs.*	*309.3 kgs.*
BC315D	*40mm*	*134.7 N-m*	*278.9 N-m*	*233.4 N-m*	*1319.0 kgs.*	*762.0 kgs.*
BC320D	*50mm*	*192.1 N-m*	*511.5 N-m*	*332.6 N-m*	*1821.6 kgs.*	*1051.4 kgs.*

	BORE SIZE	WEIGHT**		MAX. STROKE LENGTH*	MAX. PRESSURE	TEMPERATURE RANGE
		BASE	PER UNIT OF STOKE			
BC310D	1.00 in.	5.37 lbs.	0.32 lbs.	205 in	100 PSI	20° to 140° F
BC315D	1.50 in.	17.2 lbs.	0.69 lbs.	202 in		
BC320D	2.00 in.	28.9 lbs.	1.12 lbs.	142 in		
BC310D	*25mm*	*2.43 kgs.*	*0.14 kgs.*	*5207 mm*	*6.895 bar*	*-7° to 60° C*
BC315D	*40mm*	*7.76 kgs.*	*0.31 kgs.*	*5130 mm*		
BC320D	*50mm*	*13.11 kgs.*	*0.50 kgs.*	*3606 mm*		

***For longer strokes, alternate materials, mounting and/or fasteners – consult Tolomatic**

****Use these figures to calculate actuator weight instead of standard weights on pages BC3_14, BC3_14, BC3_14**

BC3 DUAL 180° CARRIER - All Sizes

DIMENSIONS

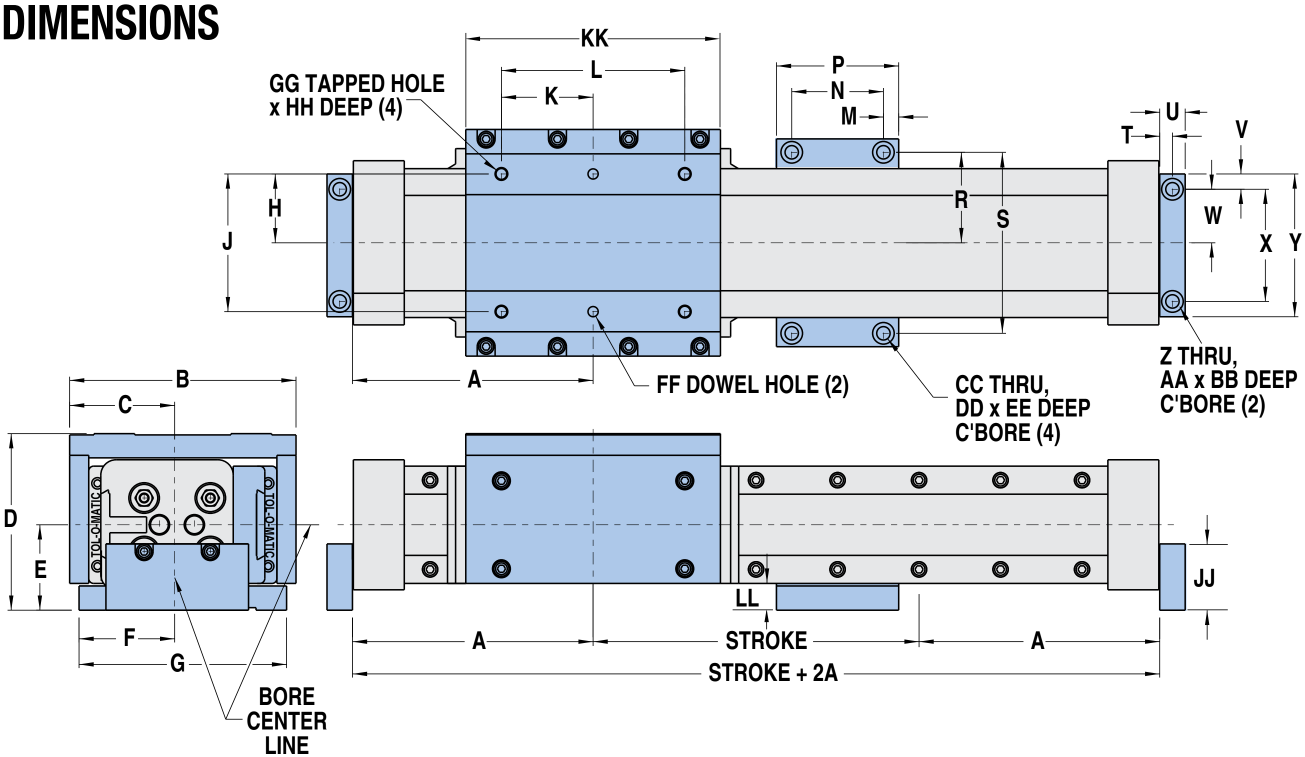

NOTE: In vertical mounting applications, supplemental mounting may be required besides factory foot mounts.

Optional Tube Supports and Foot Mounts are shown.

MODELS	BORE	A	B	C	D	E	F	G	H	J	K	L	M	N	P	R	S
BC310	1.0 in.	3.93	4.31	2.13	3.33	1.61	1.75	3.50	1.192	2.437	1.531	3.062	.28	2.563	3.12	1.469	2.937
BC315	1.5 in.	5.93	6.00	2.78	4.33	2.09	2.35	5.09	1.48	3.375	2.250	4.500	.38	2.250	3.00	2.02	4.437
BC320	2.0 in.	6.27	7.41	3.51	5.30	2.59	2.80	6.00	2.358	5.125	3.000	6.000	.38	2.250	3.00	2.422	5.250

MODELS	BORE	T	U	V	W	X	Y	Z	AA	BB	CC	DD	EE	FF*	GG	HH	JJ	KK	LL
BC310	1.0 in.	.307	.62	.28	.891	1.688	2.25	.266	.44	.28	.266	.44	.28	.252/.251 x .25	1/4-20	.47	1.25	3.67	.52
BC315	1.5 in.	.312	.62	.38	1.312	2.750	3.50	.266	.44	.28	.328	.53	.34	.252/.251 x .25	5/16-18	.59	1.62	6.25	.66
BC320	2.0 in.	.312	.62	.31	1.625	3.375	4.00	.328	.53	.34	.391	.63	.41	.252/.251 x .25	3/8-16	.66	2.00	6.75	.63

Dimensions in inches

MODELS	BORE	A	B	C	D	E	F	G	H	J	K	L	M	N	P	R	S
BC310	*25 mm*	*99.8*	*109.5*	*54.1*	*84.6*	*40.9*	*44.5*	*88.9*	*30.28*	*61.90*	*38.89*	*77.77*	*7.1*	*65.10*	*79.2*	*37.31*	*74.60*
BC315	*40 mm*	*150.6*	*152.4*	*70.61*	*110.0*	*53.1*	*59.7*	*129.3*	*37.59*	*85.73*	*57.15*	*114.30*	*9.7*	*57.15*	*76.2*	*51.31*	*112.70*
BC320	*50 mm*	*159.3*	*188.2*	*89.15*	*135.6*	*68.8*	*71.1*	*152.4*	*59.89*	*130.18*	*76.20*	*152.40*	*9.7*	*57.15*	*76.2*	*61.52*	*133.35*

MODELS	BORE	T	U	V	W	X	Y	Z	AA	BB	CC	DD	EE	FF*	GG	HH	JJ	KK	LL
BC310	*25 mm*	*7.80*	*15.7*	*7.1*	*22.63*	*42.88*	*57.2*	*6.76*	*11.2*	*7.1*	*6.8*	*11.2*	*7.1*	*6.045/6.020 x 6.4*	*M6 x 1.00*	*11.9*	*31.8*	*93.2*	*13.2*
BC315	*40 mm*	*7.92*	*15.7*	*9.7*	*33.32*	*69.85*	*88.9*	*6.76*	*11.2*	*7.1*	*8.33*	*13.5*	*8.6*	*6.045/6.020 x 6.4*	*M8 x 1.25*	*15.0*	*41.1*	*158.8*	*16.8*
BC320	*50 mm*	*7.92*	*15.7*	*7.9*	*41.28*	*85.73*	*101.6*	*8.33*	*13.5*	*8.6*	*9.93*	*16.0*	*10.4*	*6.045/6.020 x 6.4*	*M10 x 1.50*	*16.8*	*50.8*	*171.8*	*16.0*

Dimensions in millimeters

***DOWEL PINS** ⌖ | .003 | Ⓜ

⌖ | *.076* | Ⓜ

BC3 AUXILIARY CARRIER - All Sizes

AUXILIARY CARRIER

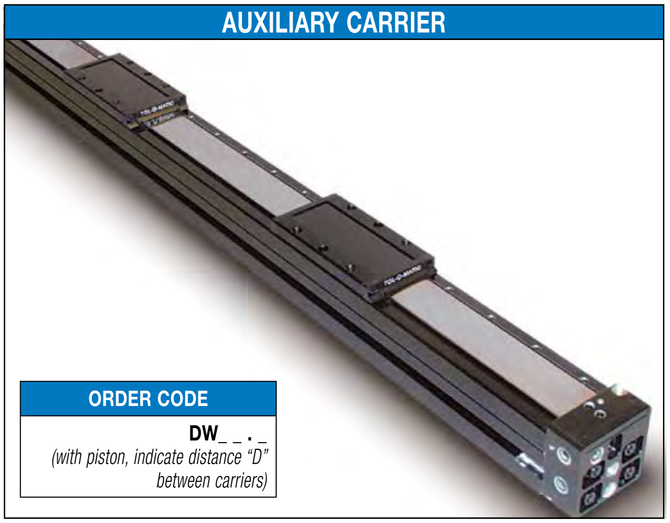

ORDER CODE

DW_ _ . _
(with piston, indicate distance "D" between carriers)

AUXILIARY CARRIER

The auxiliary carrier option substantially increases load carrying capacity and bending moments. Auxiliary carriers can only be ordered with an internal piston. When ordering, determine the minimum distance required between carriers (dimension "D" in Auxiliary Carrier Bending Moments chart below). Determine your working stroke. Enter these into your configuration string. (Example BC315SK50.00DW10.00) the configurator will calculate the overall length of the actuator.

ORDERING PROCEDURE

NOTE: Breakaway pressure will increase when using auxiliary carriers.

PERFORMANCE

BC3--DW (AUXILIARY CARRIER) BENDING MOMENTS AND LOAD

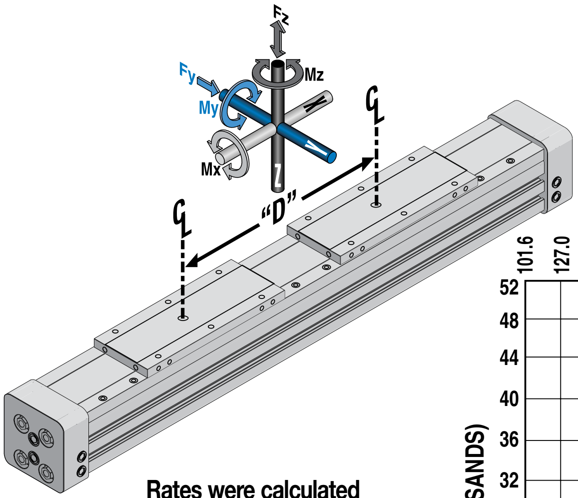

Rates were calculated with the following assumptions:

1.) Coupling between carriers is rigid.

2.) Load is equally distributed between carriers.

3.) Coupling device applies no misalignment loads to carriers.

LOAD vs. DISTANCE BC3 SERIES

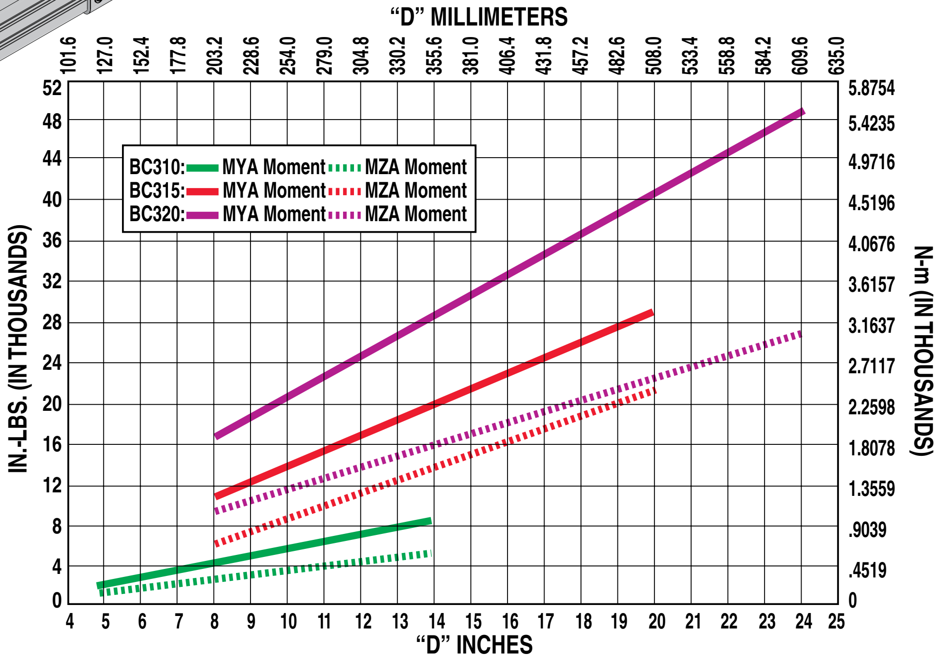

MODEL NO.	"D"* MIN.	MAXIMUM BENDING MOMENT			MAXIMUM LOAD	
		M_{YA}**	M_{XA}	M_{ZA}**	F_{ZA}	F_{YA}
BC310DW	4.88 in.	2825 in.-lbs.	500 in.-lbs.	1630 in.-lbs.	1182 lbs.	682 lbs.
BC315DW	8.07 in.	11734 in.-lbs.	1718 in.-lbs.	6779 in.-lbs.	2908 lbs.	1680 lbs.
BC320DW	8.10 in.	16265 in.-lbs.	3324 in.-lbs.	9388 in.-lbs.	4016 lbs.	2318 lbs.
BC310DW	124.0mm	319.2 N-m	56.5 N-m	184.2 N-m	536.1 kgs.	309.3 kgs.
BC315DW	205.0mm	1325.8 N-m	194.1 N-m	765.9 N-m	1319.0 kgs.	762.0 kgs.
BC320DW	205.7mm	1837.8 N-m	375.6 N-m	1060.8 N-m	1821.6 kgs.	1051.4 kgs.

*** D is distance between carriers.**

**** Loads calculated are at minimum "D", for substantially higher My + Mz loads increase "D' and refer to graph at left**

BC3 AUXILIARY DUAL 180° CARRIER - All Sizes

AUXILIARY DUAL 180° CARRIER

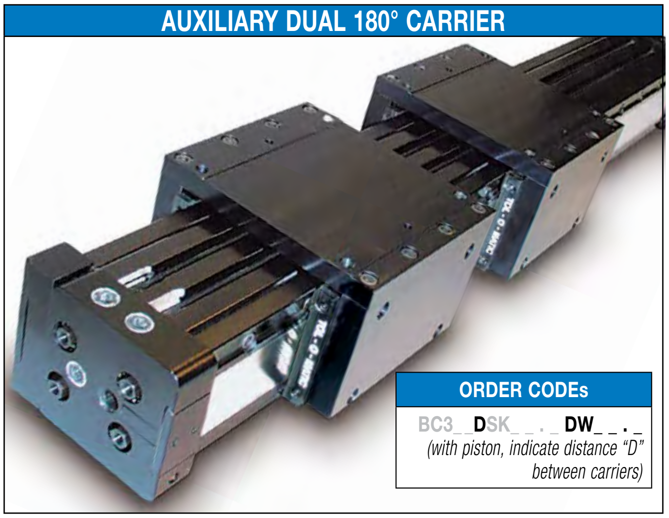

ORDER CODEs

BC3_ _ **D**SK_ _ . _ **DW**_ _ . _
(with piston, indicate distance "D" between carriers)

AUXILIARY DUAL 180° CARRIER

The auxiliary dual 180° carrier option substantially increases load carrying capacity and bending moments. Auxiliary carriers can only be ordered with an internal piston. When ordering, determine the minimum distance required between carriers (dimension "D" in Auxiliary Dual 180° Carrier Bending Moments chart below). Determine your working stroke. Enter these into your configuration string. (Example BC3D15SK50.00DW10.00) The configurator will calculate the overall length of the actuator.

ORDERING PROCEDURE

NOTE: Breakaway pressure will increase when using auxiliary dual 180° carriers.

PERFORMANCE

BC3D--DW (DUAL 180°, AUXILIARY CARRIER) BENDING MOMENTS AND LOAD

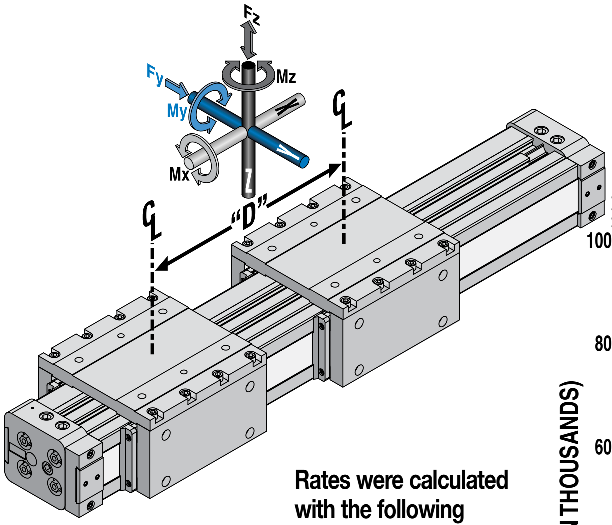

Rates were calculated with the following assumptions:

1.) Coupling between carriers is rigid.

2.) Load is equally distributed between carriers.

3.) Coupling device applies no misalignment loads to carriers.

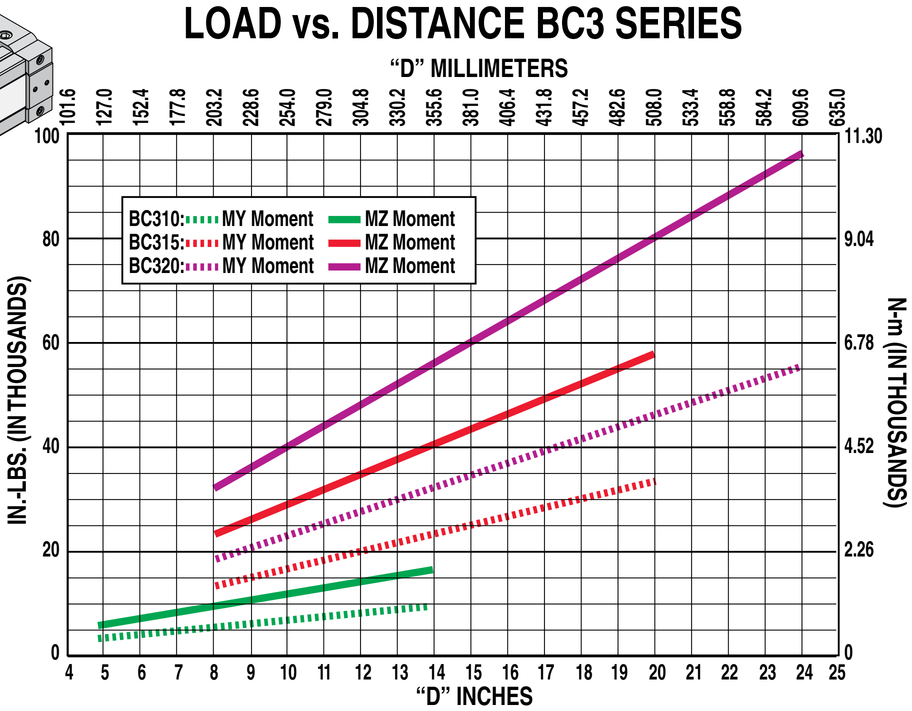

MODEL NO.	"D"* MIN.	MAXIMUM BENDING MOMENT			MAXIMUM LOAD	
		M_Y**	M_X	M_Z**	F_Z	F_Y
BC3D10DW	4.88 in.	3328 in.-lbs.	1314 in.-lbs.	5768 in.-lbs.	1364 lbs.	2364 lbs.
BC3D15DW	8.07 in.	13558 in.-lbs.	4936 in.-lbs.	23468 in.-lbs.	3360 lbs.	5816 lbs.
BC3D20DW	8.10 in.	18776 in.-lbs.	9054 in.-lbs.	32530 in.-lbs.	4636 lbs.	8032 lbs.
BC3D10DW	124.0mm	373 N-m	147 N-m	646 N-m	619 kgs.	1072 kgs.
BC3D15DW	205.0mm	1518 N-m	553 N-m	2628 N-m	1524 kgs.	2638 kgs.
BC3D20DW	205.7mm	2103 N-m	1014 N-m	3643 N-m	2103 kgs.	3643 kgs.

*** D is distance between carriers.**

**** Loads calculated are at minimum "D", for substantially higher My + Mz loads increase "D' and refer to graph at left**

BC3 SINGLE END PORTING - All Sizes

SINGLE END PORTING

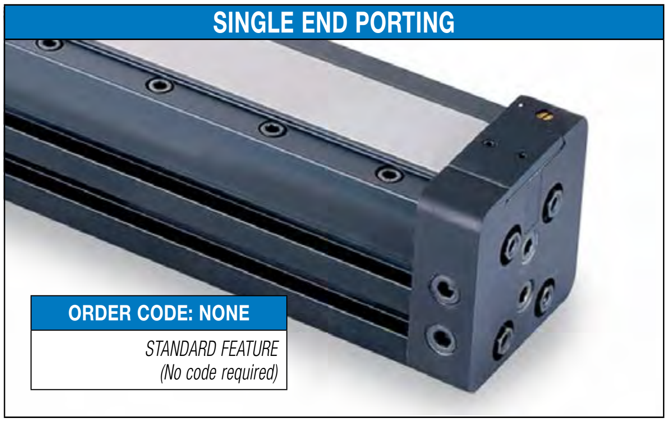

ORDER CODE: NONE

STANDARD FEATURE
(No code required)

The BC3 is uniquely designed for multiple port locations including single end porting. This is a standard feature on all bore sizes of the BC3. The lower ports on the head assembly only function when used to cross port the cylinder for single end porting.

To convert to single end porting, remove access pipe plug fitting from the opposite head assembly that the air lines will be installed into. Then remove the internal port pipe plug. Reinstall access pipe plug into the bottom of the head. Remove pipe plug from the head that the air lines will be installed.

AIR FLOW DIAGRAMS

SINGLE END PORTING ALLOWS THE GREATEST FLEXIBILITY IN AIR HOOK UP

Converting from Standard porting to Left or Right side porting can be achieved if plugs are placed as in the diagram below.

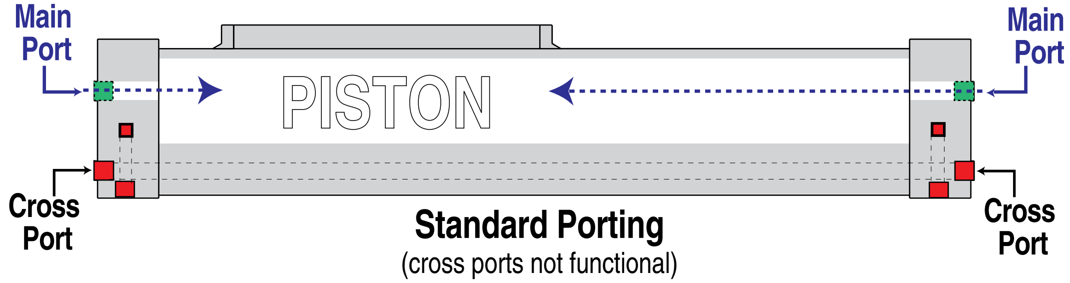

Standard Porting
(cross ports not functional)

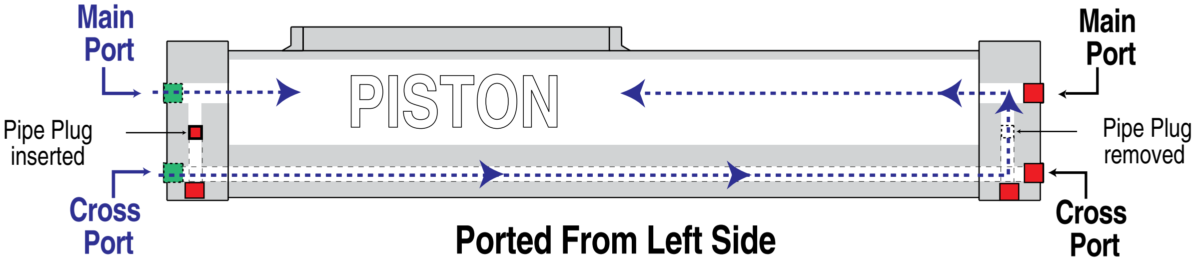

Ported From Left Side

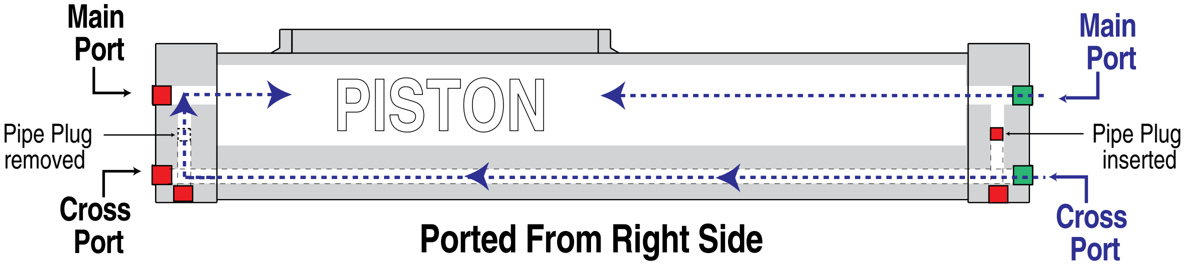

Ported From Right Side

🟩 Open 🟥 Plugged

Diagrams shown for BC315 and BC320

Note: Standard porting may be field converted to ported from left or ported from right. For complete instructions refer to parts sheet.

BC3 SWITCHES - All Sizes

SWITCHES

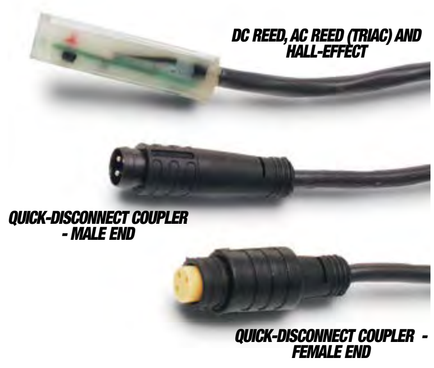

There are 10 sensing choices: DC reed, form A (open) or form C (open or closed); AC reed (Triac, open); Hall-effect, sourcing, PNP (open); Hall-effect, sinking, NPN (open); each with either flying leads or QD (quick disconnect). Commonly used to send analog signals to PLC (programmable logic controllers), TLL, CMOS circuit or other controller device. These switches are activated by the actuator's magnet.

Switches contain reverse polarity protection. QD cables are shielded; shield should be terminated at flying lead end.

If necessary to remove factory installed switches, be sure to reinstall on the same of side of actuator with scored face of switch toward internal magnet.

SPECIFICATIONS

	REED DC				REED AC		HALL-EFFECT DC			
ORDER CODE	RT	RM	BT	BM	CT	CM	TT	TM	KT	KM
LEAD	5m	QD*	5m	QD*	5m	QD*	5m	QD*	5m	QD*
CABLE SHIELDING	Unshielded	Shielded†	Unshielded	Shielded†	Unshielded	Shielded†	Unshielded	Shielded†	Unshielded	Shielded†
SWITCHING LOGIC	"A" Normally Open		"C" Normally Open or Closed		Triac Normally Open		PNP (Sourcing) Normally Open		NPN (Sinking) Normally Open	
MECHANICAL CONTACTS	Single-Pole Single-Throw		Single-Pole Double-Throw		Single-Pole Single-Throw		NO, These Are Solid State Components			
COIL DIRECT	Yes		Yes		Yes		—			
POWER LED	None		None		None		None		None	
SIGNAL LED	Red						Red		Red	
OPERATING VOLTAGE	200 Vdc max.		120 Vdc max.		120 Vac max.		5 - 25 Vdc			
OUTPUT RATING	—				—		25 Vdc, 200mA dc			
OPERATING TIME	0.6 msec max. (including bounce)		0.7 msec max. (including bounce)		—		< 10 micro sec.			
OPERATING TEMPERATURE	-40°F [-40°C] to 158°F [70°C]						0°F [-18°C] to 150°F [66°C]			
RELEASE TIME	1.0 msec. max.				—		—			
ON TRIP POINT	—				—		150 Gauss maximum			
OFF TRIP POINT	—				—		40 Gauss minimum			
****POWER RATING (WATTS)**	10.0 §		3.0 §§		10.0		5.0			
VOLTAGE DROP	2.6 V typical at 100 mA		NA		—		—			
RESISTANCE	0.1 Ω Initial (Max.)				—		—			
CURRENT CONSUMPTION	—				1 Amp at 86°F [30°C]	0.5 Amp at 140°F [60°C]	200 mA at 25 Vdc			
FREQUENCY	—				47 - 63 Hz		—			
CABLE MIN. BEND RADIUS STATIC	0.630" *[16mm]*									
DYNAMIC	Not Recommended									

CAUTION: DO NOT OVER TIGHTEN SWITCH HARDWARE WHEN INSTALLING!

** **WARNING**: Do not exceed power rating (Watt = Voltage X Amperage). Permanent damage to sensor will occur.

*QD = Quick Disconnect; Male coupler is located 6" [152mm} from sensor,
Female coupler to flying lead (part #2503-1025) distance is 197" [5m] also see Cable Shielding specification above

REPLACEMENT OF QD SWITCHES MANUFACTURED BEFORE JULY 1, 1997: It will be necessary to replace or rewire the female end coupler.

CURRENT
Quick disconnect
Wiring

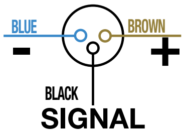

OLD
Quick disconnect
Wiring

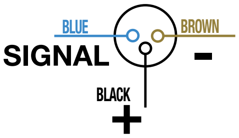

Reed Switch Life Expectancy: Up to 200,000,000 cycles (depending on load current, duty cycle and environmental conditions)

---

†Shielded from the female quick disconnect coupler to the flying leads. Shield should be terminated at flying lead end.

§ Maximum current 500mA (not to exceed 10VA) Refer to Temperature vs. Current graph and Voltage Derating graph

§§ Maximum current 250mA (not to exceed 3VA) Refer to Temperature vs. Current graph and Voltage Derating graph

BC3 SWITCHES - All Sizes

PERFORMANCE

TEMP. vs CURRENT, DC REED

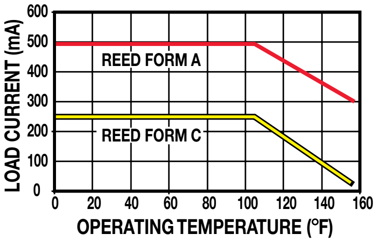

TEMP. vs CURRENT, AC REED

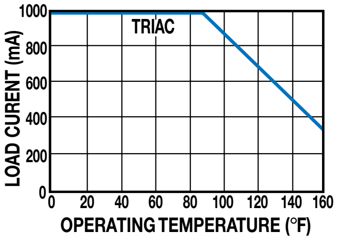

VOLTAGE DERATING, DC REED

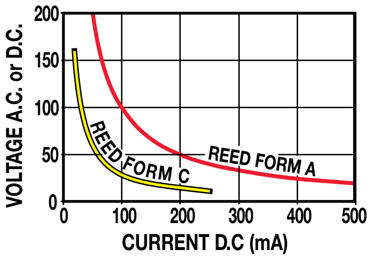

WIRING DIAGRAMS

RT & RM DC REED, FORM A

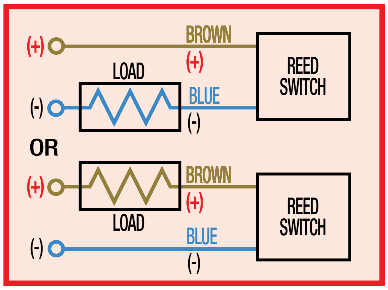

CT & CM AC REED, TRIAC

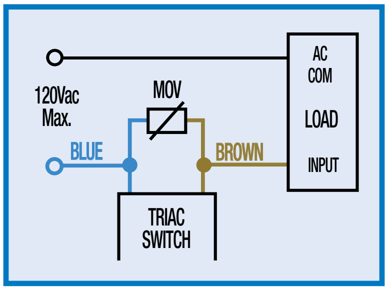

BT & BM DC REED, FORM C

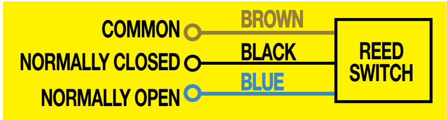

TT & TM HALL-EFFECT, SOURCING, PNP

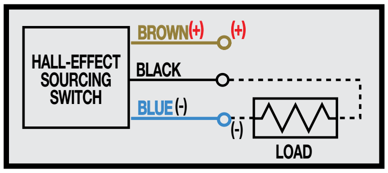

KT & KM HALL-EFFECT, SINKING, NPN

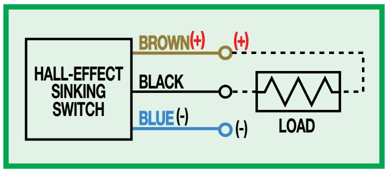

INSTALLATION INFORMATION

THE NOTCHED FACE OF THE SWITCH INDICATES THE SENSING SURFACE AND MUST FACE TOWARD THE MAGNET.

THE NOTCHED GROOVE IN THE ACTUATOR INDICATES THE GROOVE TO INSTALL THE SWITCH. CONTACT TOLOMATIC IF SWITCHES ARE REQUIRED ON ANOTHER SIDE OF ACTUATOR.

Some actuators may require switch mounting
on a specific side of the assembly.
Call Tolomatic for details.

DIMENSIONS

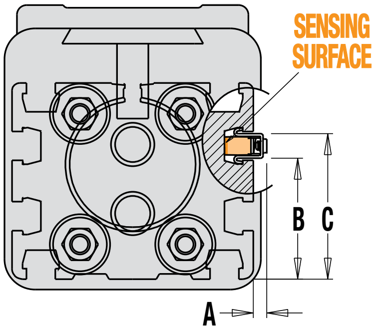

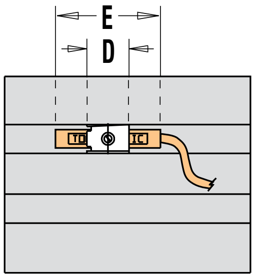

SIZE	BORE	A	B	C	D	E
10	1.000	0.194	0.822	0.906	0.500	1.250
15	1.500	0.160	1.428	1.721	0.500	1.250
20	2.000	0.036	1.994	2.287	0.500	1.250

Dimensions in inches

SIZE	BORE	A	B	C	D	E
10	25	4.93	20.88	23.01	12.70	31.75
15	40	4.06	36.27	43.71	12.70	31.75
20	50	0.91	50.65	58.09	12.70	31.75

Dimensions in millimeters

BC3 SHOCK ABSORBERS - All Sizes

SHOCK ABSORBERS

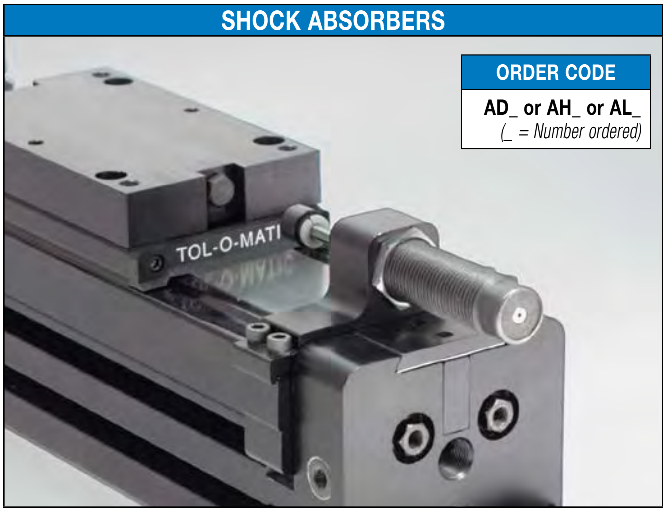

ORDER CODE

AD_ or AH_ or AL_
(_ = Number ordered)

Rodless cylinders with standard internal cushion offer an effective method of decelerating loads. However, all Tolomatic rodless cylinders are capable of carrying heavier loads at higher velocities than the cylinder cushion can absorb. Optional shock absorbers can be used to increase the cylinder's life and broaden the application range for the cylinder model you have chosen.

Tolomatic offers adjustable shock absorbers for the BC3. They allow the shock to be positioned at any point along the cylinder.

A shock stop plate must be used in conjunction with the BC3 shock to provide a stopping surface on the carrier.

Typical shock absorber life varies between 1-2 million cycles (depending on environment) appropriate preventative maintenance should be considered in high cyclic applications.

NOTE: When 2 shock absorbers are ordered, the unit will be assembled with NO internal cushions.

⚠ CAUTION: In applications which result in a load bending moment at deceleration, care should be taken to decelerate the load rather than the carrier of the band cylinder.

DIMENSIONS

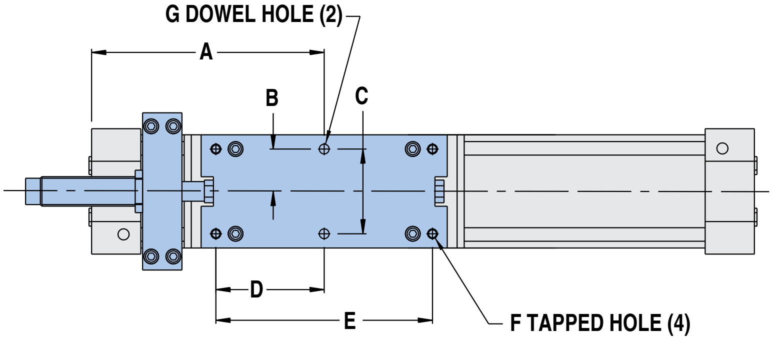

*NOTE: Shock Absorber option will increase the overall carrier height "M".

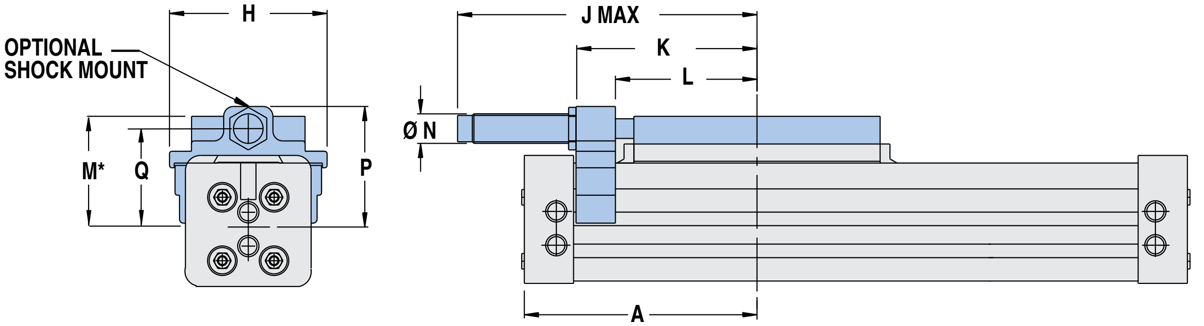

SIZE	BORE	A	B	C	D	E	F	G**	H	J	K	L	M	N	P	Q
10	1.00	3.93	0.890	1.781	1.562	3.125	1/4-20 x .50DP	.252-.251 x .25	3.09	5.47	2.91	2.22	2.223	0.50	2.46	1.964
15	1.50	5.93	1.078	2.156	2.750	5.500	1/4-20 x .50DP	.252-.251 x .25	4.00	7.65	4.59	3.59	2.812	0.75	3.06	2.495
20	2.00	6.27	1.563	3.125	2.938	5.875	5/16-18 x .75DP	.252-.251 x .69	5.06	8.14	4.88	3.88	3.594	1.00	3.88	3.230

**DOWEL PINS ⌖ .003 Ⓜ

Dimensions in inches

SIZE	BORE	A	B	C	D	E	F	G**	H	J	K	L	M	N	P	Q
10	25	99.8	22.62	45.24	39.69	79.38	M6-1.0 x 12.7DP	6.05-6.02 x 6.4	78.5	138.9	73.9	56.4	56.46	14.0	62.5	49.89
15	40	150.7	27.38	54.76	69.85	139.70	M6-1.0 x 12.7DP	6.05-6.02 x 6.4	101.6	194.2	116.6	91.2	71.42	20.0	77.7	63.37
20	50	159.3	39.69	79.38	76.62	149.23	M8-1.25 x 19.1DP	6.05-6.02 x 17.5	128.5	206.8	124.0	98.6	91.29	25.4	98.6	82.04

**DOWEL PINS ⌖ .076 Ⓜ

Dimensions in millimeters

BC3 Shock Absorbers - All Sizes - PERFORMANCE

VELOCITY vs LOAD

BC310

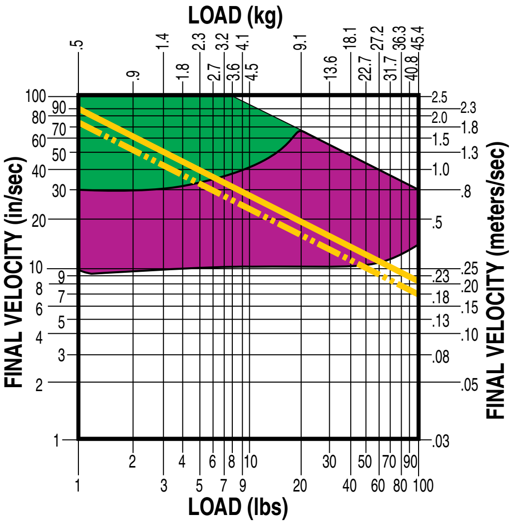

BC315

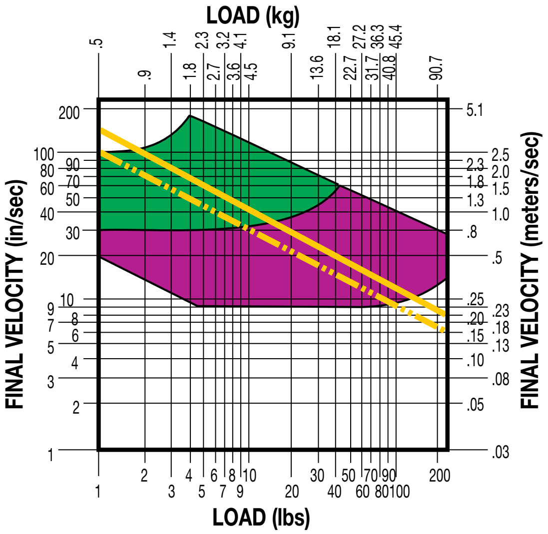

BC320

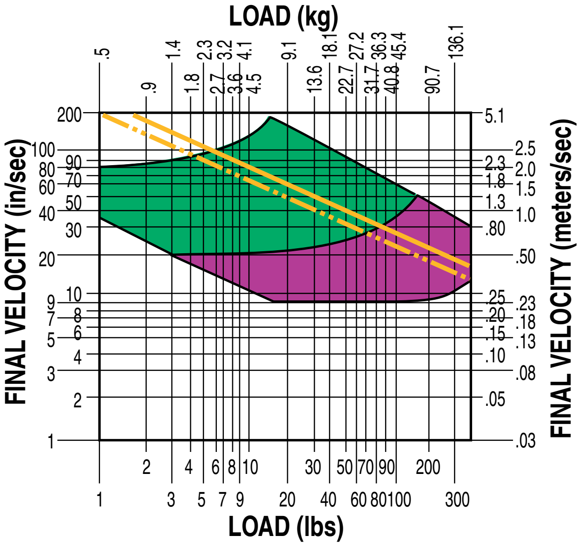

🟩 LIGHT DUTY (Light load/High velocity)

🟪 HEAVY DUTY (Heavy load/Low velocity)

🟨 AIR CUSHION DATA

NOTE: If final (or impact) velocity cannot be calculated directly, a reasonable guideline to use is 2 x average velocity.

Application Data Worksheet

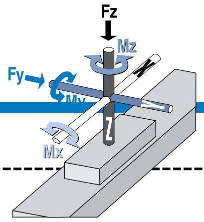

STROKE LENGTH ______________
☐ inch (SK) (U.S. Standard) ☐ millimeters (SM) (Metric)

AVAILABLE AIR PRESSURE _____
☐ PSI (U.S. Standard) ☐ bar (Metric)

REQUIRED THRUST FORCE _____
☐ lbf (U.S. Standard) ☐ N (Metric)

LOAD ______________________
☐ lb (U.S. Standard) ☐ kg (Metric)

LOAD CENTER OF GRAVITY DISTANCE TO CARRIER CENTER
d_x _______
d_y _______
d_z _______
☐ inch (U.S. Standard) ☐ millimeters (Metric)

FORCES APPLIED TO CARRIER
F_z _______
F_y _______
☐ lbf (U.S. Standard) ☐ N (Metric)

BENDING MOMENTS APPLIED TO CARRIER
M_x _______
M_y _______
M_z _______
☐ in-lbs (U.S. Standard) ☐ N-m (Metric)

FINAL VELOCITY ______________
☐ in/sec (U.S. Standard) ☐ mm/sec (Metric)

MOVE TIME sec. ______________

NO. OF CYCLES ______________
☐ per minute ☐ per hour

ORIENTATION

☐ Horizontal

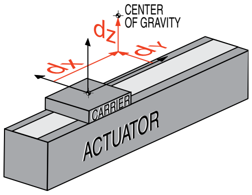

☐ Side

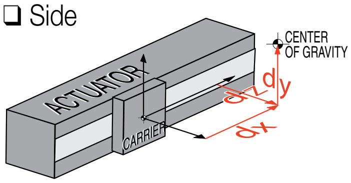

☐ Horizontal Down

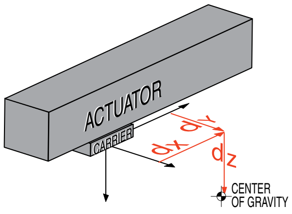

☐ Vertical

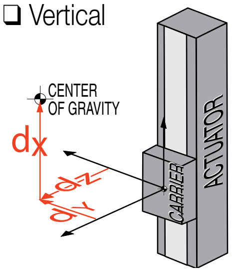

☐ Angled α __________ β __________

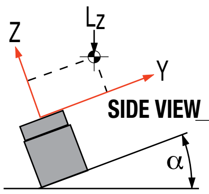

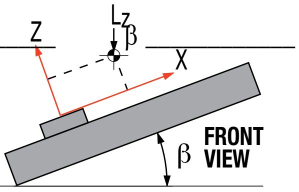

OTHER ISSUES:
(i.e. Environment, Temperature, Contamination, etc.) ______________________

____

____

____

Contact information: ______________________

____

____

____

Fax (1-763-478-8080) or call Tolomatic (1-800-328-2174) with the above information.
We will provide any assistance needed to determine the proper actuator.

Rodless Cylinder Selection Guidelines - BC2, BC3, BC4, LS - All Sizes

PROVIDING LOAD GUIDANCE AND SUPPORT

The process of selecting a load bearing actuator for a given application can be complex. It is highly recommended that you contact Tolomatic or a Tolomatic Distributor for assistance in selecting the best actuator for your application. The following overview of the selection guidelines are for educational purposes only.

1 COMPILE APPLICATION REQUIREMENTS

To determine the appropriate Band Cylinder or Linear Slide model for an application, compile the following information:

- Available pressure (PSI)
- Weight of load (lbs or kg)
- Orientation of load (lbs or kgs)
- Velocity of load (in/sec or mm/sec)
- Stroke length (in or mm)

HINT: Use Tolomatic sizing and selection software, download at: tolomatic.com

2 SELECT CYLINDER SIZE

- Consult the Theoretical Force vs. Pressure charts.
- Cross-reference the load force (or load weight if force is not known) and the available operating pressure. If the intersection falls below the diagonal line, and if moments do not exceed maximum values listed for that model (see Step 3), the actuator will accommodate the application.

  If the intersection is above the diagonal line, a larger cylinder bore size should be considered.

NOTE: Additional force may be required to obtain the necessary acceleration for vertical or horizontal loads.

3 DETERMINE NATURE OF LOAD AND THE EFFECT OF BENDING MOMENTS

If the cylinder will guide and support a load located directly over the center of carrier, bending moments will not be a factor in the cylinder selection.

NOTE: The maximum load "L" must not exceed the capacity limits of the cylinder selected.

- Bending Moments

  For off center or side loads, determine the distance from the center of mass of the load to the center of the carrier bracket. This measurement is needed to calculate the torque for bending moments. (Refer to Bending Moment chart for each model.)

  Should the resulting maximum bending moment exceed figures indicated on the chart, external guides, auxiliary carrier/s or a larger cylinder should be considered.

- Auxiliary Carrier Bending Moments

  The auxiliary carrier option (available on most models) increases load carrying capacity and bending moments. Auxiliary carriers can be ordered with or without an internal piston. (Auxiliary carriers without a piston have no internal cushion on the cylinder end closest to the auxiliary carrier.)

  IMPORTANT: When ordering, determine the working stroke, then the minimum distance required between carriers (dimension "D" in Auxiliary Carrier Bending Moments chart). When ordered, Tolomatic's configurator will calculate the overall length of the actuator.

NOTE: breakaway pressure will increase when using auxiliary carriers.

4 DETERMINE INTERNAL CUSHION CAPACITY

- Consult the Cushion Data chart for the model selected. The velocities listed on the cushion charts are final or cushion impact velocities. On applications where the internal cushions or bumpers are to be used, be sure the actual, final or impact velocity is known. If the velocity is not known, use of limit switches with valve deceleration circuits or shock absorbers should be considered. NOTE: The BC205 uses external bumpers in place of internal cushions, LS05 & LS10 do not have cushions or bumpers.
- Cross-reference the final velocity and weight of the load. If the intersection is below the diagonal lines, the internal cushions on the actuator may be used. If the point falls above the dashed diagonal line or if the velocity is not known, use deceleration circuits, external shock absorbers or select a larger cylinder with greater cushion capacity. On high-cyclic applications, use of external stops is strongly recommended.

5 DETERMINE TUBE SUPPORT REQUIREMENTS

- Consult the Tube Support chart for the model selected.
- Cross reference the load weight and maximum distance between supports.

6 CONSIDER OPTIONS

- Switches– dc Reed, Hall-effect or ac Triac

Band Cylinders and Linear Slides each have different standard features and options. Check the options section for the actuator you have selected.

- Shock Absorbers– if needed.
- Foot Mounting Kits
- Floating Mount Bracket – use when lack of parallelism occurs between the cylinder and an external guided and supported load.
- Single End Porting (BC3, BC4)
- Long Carrier (BC4)
- Proximity Sensors (LS)
- Dual 180° Carrier (BC3)

Application Guidelines

The following conditional statements are intended as general guidelines for use of Tolomatic actuators. Since all applications have their own specific operating requirements, consult Tolomatic, Inc. or your local Tolomatic distributor if an application is unconventional or if questions arise regarding the selection process.

CUSHION NEEDLE ADJUSTMENT (BC2, BC3, BC4, CC, SA, DP, TC ONLY)

Adjust the cushion needles in the cylinder heads carefully to obtain a smooth, hesitation free deceleration for your particular application. If there are questions on proper adjustment, please consult Tolomatic, Inc.

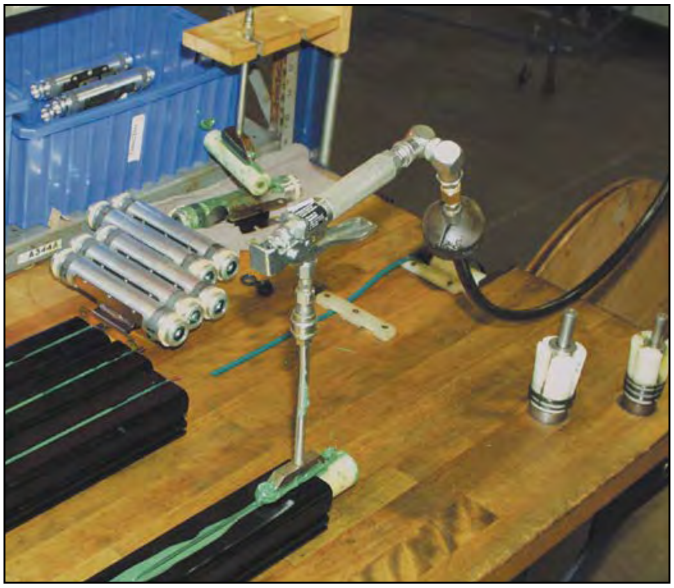

LUBRICATION GUIDELINES

All Tolomatic actuators (except Cable Cylinders) are prelubricated at the factory. To ensure maximum actuator life, the following guidelines should be followed.

- **Filtration**

  We recommend the use of dry, filtered air in our products. “Filtered air” means a level of 10 Micron or less. “Dry” means air should be free of appreciable amounts of moisture. Regular maintenance of installed filters will generally keep excess moisture in check.

- **External Lubricators (optional)**

  The factory prelubrication of Tolomatic actuators will provide optimal performance without the use of external lubrication. However, external lubricators can further extend service life of pneumatic actuators if the supply is kept constant.

  Oil lubricators, (mist or drop) should supply a minimum of 1 drop per 20 standard cubic feet per minute to the cylinder. As a rule of thumb, double that rate if water in the system is suspected. Demanding conditions may require more lubricant.

  If lubricators are used, we recommend a non-detergent, 20cP @ 140°F 10-weight lubricant. Optimum conditions for standard cylinder operation are +32° to +150°F (+0° to 65.5°C).

  NOTE: Use of external lubricators may wash away the factory installed lubrication. External lubricants must be maintained in a constant supply or the results will be a dry actuator prone to premature wear.

- **Sanitary Environments**

  Oil mist lubricators must dispense “Food Grade” lubricants to the air supply. Use fluids with ORAL LD50 toxicity ratings of 35 or higher such as Multitherm® PG-1 or equivalent. Demanding conditions can require a review of the application.

FINAL VELOCITY CALCULATION

Velocity calculations for all rodless cylinders need to differentiate between final velocity and average velocity. For example: Stroking a 100-inch BC3 model in one second yields an average velocity of 100 inches per second. To properly determine the inertial forces for cushioning, it is important to know the final (or impact) velocity. Rodless cylinders accelerate and decelerate at each end of the stroke. Therefore this acceleration must be considered (see diagram).

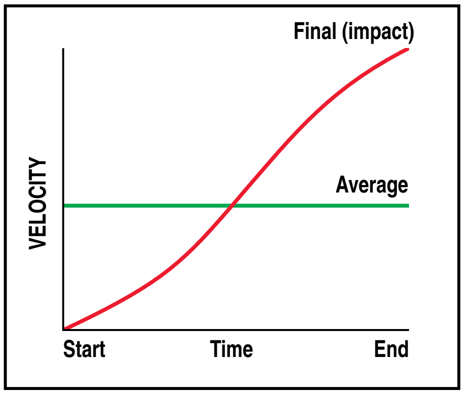

If final (or impact) velocity cannot be calculated directly, a reasonable guideline is to use 2 x average velocity.

BC3 APPLICATION GUIDELINES

BC3 DECELERATION CONSIDERATIONS

While the BC3 is capable of carrying very large loads, consideration must be given to how to stop the load at the end of stroke. If Tolomatic cushions or shocks are to be used, please stay within the specifications on page BC3_26. If you should decide to utilize another type of shock absorber, be sure that the deceleration of the load is smooth and over adequate distance.

⚠ CAUTION: In applications which result in a load bending moment at deceleration, care should be taken to decelerate the load rather than the carrier of the band cylinder.

BC3 BEARING LUBRICATION

The bearing system for the BC3 is prelubricated at the factory with a high quality No. 2 lithium-soap base grease. Relubrication is recommended every 10 million linear feet using a lithium-soap base grease for optimal bearing performance. To relubricate, lift back upper sealing band and apply grease directly to the stationary ball ways. Applications that are exposed to moisture or dirt, may require more frequent relubrication.

PERFORMANCE

BC3 CYLINDER/LOAD DEFLECTION

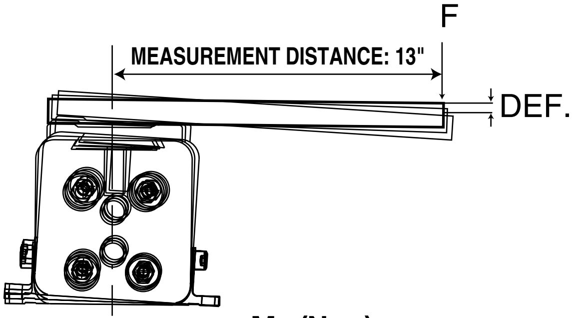

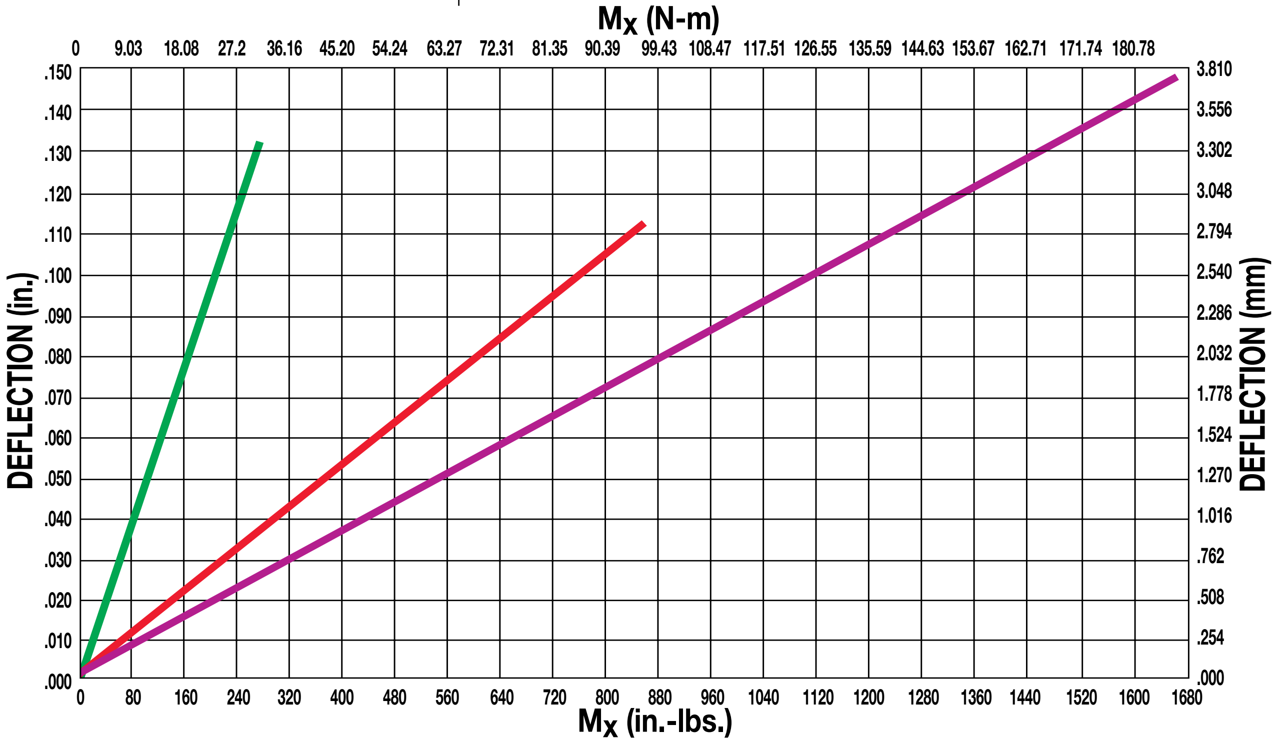

BC310: 🟩
BC315: 🟥
BC320: 🟪

Deflection figures were calculated with the following considerations:
1.) Tube supports spaced at mimimum distances for each bore size.
2.) Measurement distance from center of carrier is 13 inches.

BC3 Service Parts Ordering - ALL Sizes

Inch (U.S. Standard) SIZE	10	D10	15	D15	20	D20
Foot Mount Kits[1]	3410-9005	3410-9025	3415-9005	3415-9025	3420-9005	3420-9025
Shock Mount Kit w/ Shock[2] – Heavy Duty	3410-9013	3410-9013	3415-9013	3415-9013	3420-9013	3420-9013
Shock Mount Kit w/ Shock[2] – Lite Duty	3410-9010	3410-9010	3415-9010	3415-9010	3420-9010	3420-9010
Shock Mount Kit w/o Shock[3] (Hardware Only)	3410-9003	3410-9003	3415-9003	3415-9003	3420-9003	3420-9003
Shock Stop Plate Kit[4]	3410-9004	3410-9004	3415-9004	3415-9004	3420-9004	3420-9004
Tube Supports[5]	3410-9006	3410-9026	3415-9006	3415-9026	3420-9006	3420-9026
Repair Kit[6]	RKBC310NP	RKBC3D10NP	RKBC315NP	RKBC3D15NP	RKBC320NP	RKBC3D20NP

Metric SIZE	10	10D	15	15D	20	20D
Foot Mount Kits[1]	4410-9005	4410-9025	4415-9005	4415-9025	4420-9005	4420-9025
Shock Mount Kit w/ Shock[2] – Heavy Duty	4410-9013	4410-9013	4415-9013	4415-9013	4420-9013	4420-9013
Shock Mount Kit w/ Shock[2] – Lite Duty	4410-9010	4410-9010	4415-9010	4415-9010	4420-9010	4420-9010
Shock Mount Kit w/o Shock[3] (Hardware Only)	4410-9003	4410-9003	4415-9003	4415-9003	4420-9003	4420-9003
Shock Stop Plate Kit[4]	4410-9004	4410-9004	4415-9004	4415-9004	4420-9004	4420-9004
Tube Supports[5]	4410-9006	4410-9026	4415-9006	4415-9026	4420-9006	4420-9026
Repair Kit[6]	RKBC310TP(GP)	RKBC310DTP(GP)	RKBC315TP(GP)	RKBC315DTP(GP)	RKBC320TP(GP)	RKBC320DTP(GP)

Service Parts Ordering NOTES:

[1] Foot Mount Kit contains one bracket and mounting hardware.
[2] Shock Field Retrofit Kit contains one shock absorber and mounting hardware.
[3] Shock Field Mount Kit contains one set of mounting hardware.
[4] Shock Stop Plate Kit contains shock plate, impact bolts, screws and dowel pins.
[5] Contains one tube support and mounting hardware.
[6] Repair Kit contains external dust band, internal seal band, wipers, end caps and internal soft seals. Stroke length must be indicated after repair kit code.

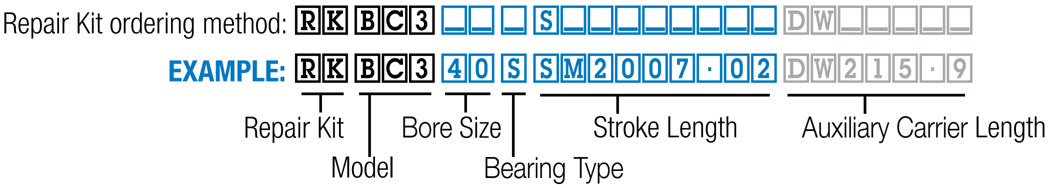

Switch Ordering NOTES:

To order field retrofit switch and hardware kits for all Tolomatic actuators: SW (Then the model and bore size, and type of switch required)

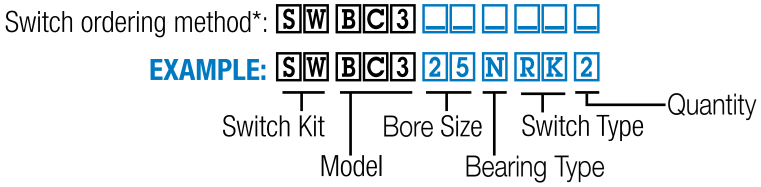

*Hardware and Form A Reed switch with 5 meter lead for 1.5" bore BC3 band cylinder

	CONFIG. CODE ORDERING Mounting Hardware & FE conn. included
DESCRIPTION	CODE
Switch Kit, Reed, Form C, 5m	BT
Switch Kit, Reed, Form C, Male Conn.	BM
Switch Kit, Reed, Form A, 5m	RT
Switch Kit, Reed, Form A, Male Conn.	RM
Switch Kit, Triac, 5m	CT
Switch Kit, Triac, Male Conn.	CM
Switch Kit, Hall-effect, Sinking, 5m	KT
Switch Kit, Hall-effect, Sinking, Male Conn.	KM
Switch Kit, Hall-effect, Sourcing, 5m	TT
Switch Kit, Hall-effect, Sourcing, Male Conn.	TM

NOTE: When kit is ordered female connector & all mounting hardware is included

BC3 Ordering - ALL Sizes

MODEL, BORE, STROKE | **OPTIONS**

BC3 10 D NP SK100.250 | DW6.0 TS3 FM2 AH2 BM2

MODEL & MOUNTING

BC3	BC3 Band Cylinder

BORE SIZE

10	1.00"	*(25mm)*
15	1.50"	*(40mm)*
20	2.00"	*(50mm)*

DUAL 180° CARRIER (BC3_14)

D	Dual 180° Carrier Option

MOUNTING & PORTS

NP	US standard mounting & NPT ports
TP†	Metric mounting with metric taper port
GP†	Metric mounting with metric parallel port

† The metric version provides metric tapped holes for mounting of the load to the carrier and of the actuator to mounting surfaces & metric ports

STROKE LENGTH & MOUNTING TYPE

SK __ . __	**Stroke, enter desired stroke length in inches**
SM† __ . __	**Stroke, enter desired stroke length in millimeters**

NOTE: Actuator mounting threads and mounting fasteners will be either inch or metric; depending on how stroke length is indicated.

SK = inch mounting
SM = metric mounting

MAXIMUM STROKE

	...SK	...SM
SIZE	**in**	*mm*
10	**205**	*5,207*
15	**202**	*5,130*
20	**142**	*3,606*

NOTE: Prelubrication is standard on all BC3 Band Cylinders (see Application Guidelines on page BC3_25)

AUXILIARY CARRIER (BC3_16)

DW	Auxiliary carrier With piston & "D" distance
_ _._ _	"D" Distance between carriers "D" Distance between carriers in inches (**SK**) or millimeters (**SM**)

(Same unit of measure as stroke length is required)

MINIMUM "D" DISTANCE BETWEEN CARRIERS

	with Piston	
	in	*mm*
10	4.88	*124.0*
15	8.07	*205.0*
20	8.10	*205.7*

When ordering auxiliary carrier option, enter the distance required between carriers. The configurator will calculate the overall length of the actuator.

TUBE SUPPORTS (BC3_12)

TS_	Tube Support & number required

Each TS includes two (2) tube support halves

T-NUTS

TN_	additional T-Nuts (see individual dimensional drawings for sizes)

FOOT MOUNT (BC3_13)

FM_	Foot Mount & number required (1 or 2)

Not all codes listed are compatible with all options. Contact Tolomatic with any questions.

SHOCK ABSORBERS (BC3_21)

***AD_**	Shock hardware Only and number required
***AH_**	Shock, Heavy duty and number required
***AL_**	Shock, Light duty and number required

**NOTE: When shock absorbers are ordered cushion seals are removed.*

SWITCHES (BC3_19)

TYPE		QUICK-DISCONNECT	CODE	QUANTITY	LEAD LENGTH
REED	Form A	QD	**RM**	**After code enter quantity desired**	**5 meters**
		no	**RT**		
	Form C	QD	**BM**		
		no	**BT**		
HALL-EFFECT	Sinking	QD	**KM**		
		no	**KT**		
	Sourcing	QD	**TM**		
		no	**TT**		
TRIAC		QD	**CM**		
		no	**CT**		

Tolomatic™
EXCELLENCE IN MOTION

LS LINEAR SLIDE RODLESS CYLINDER

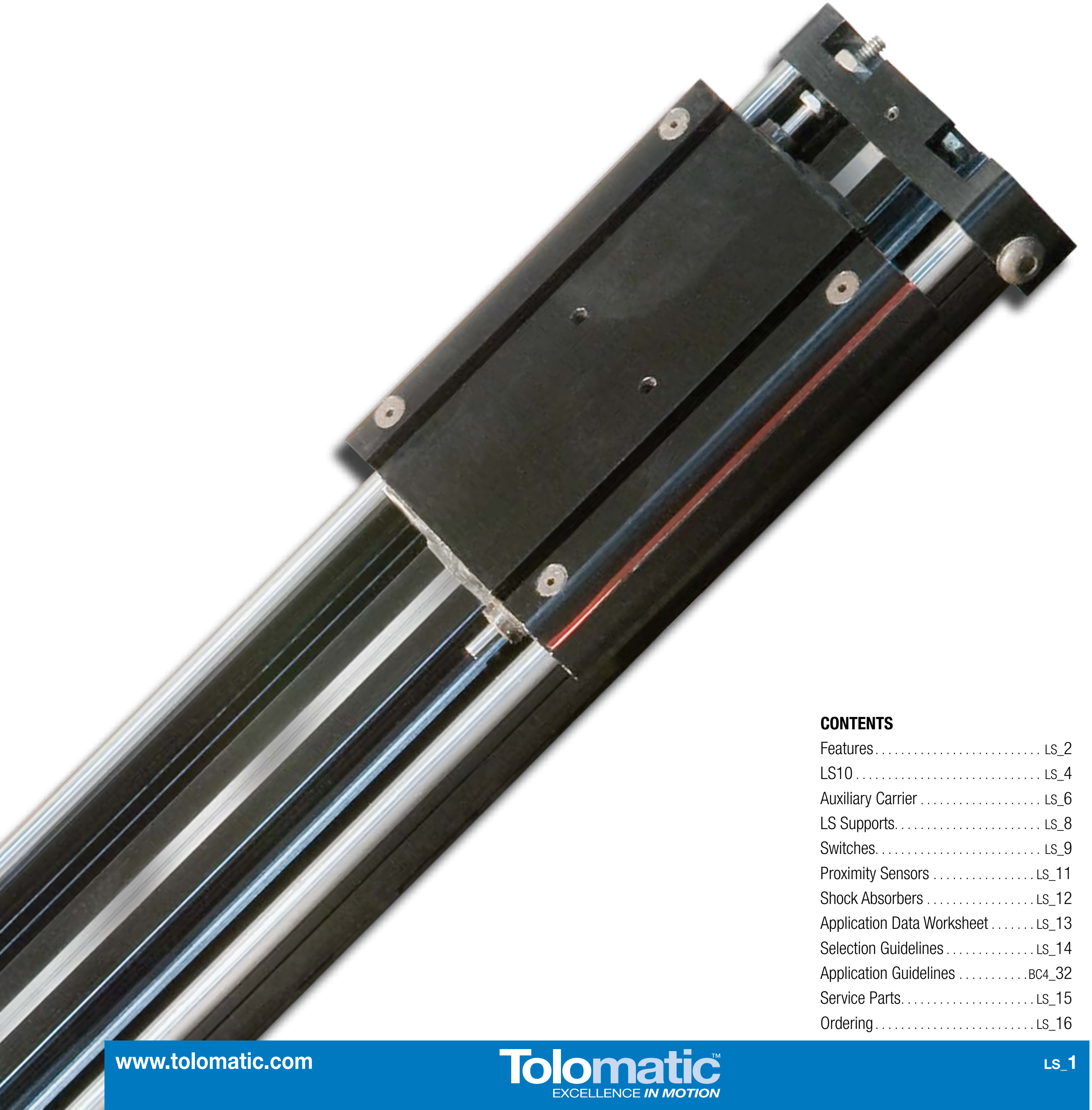

CONTENTS

LS - LINEAR SLIDE

ENDURANCE TECHNOLOGY℠

A Tolomatic Design Principle

Endurance Technology features are designed for maximum durability to provide extended service life.

Adapted from the popular BC2, the Linear Slide features 2 precision steel guide rods integrated with the extrusion to provide positive support of the load. This makes the Linear Slide more rugged and capable with greater load capacity and higher bending moments. Built-to-order in stroke lengths up to 110 inches (2,794mm).

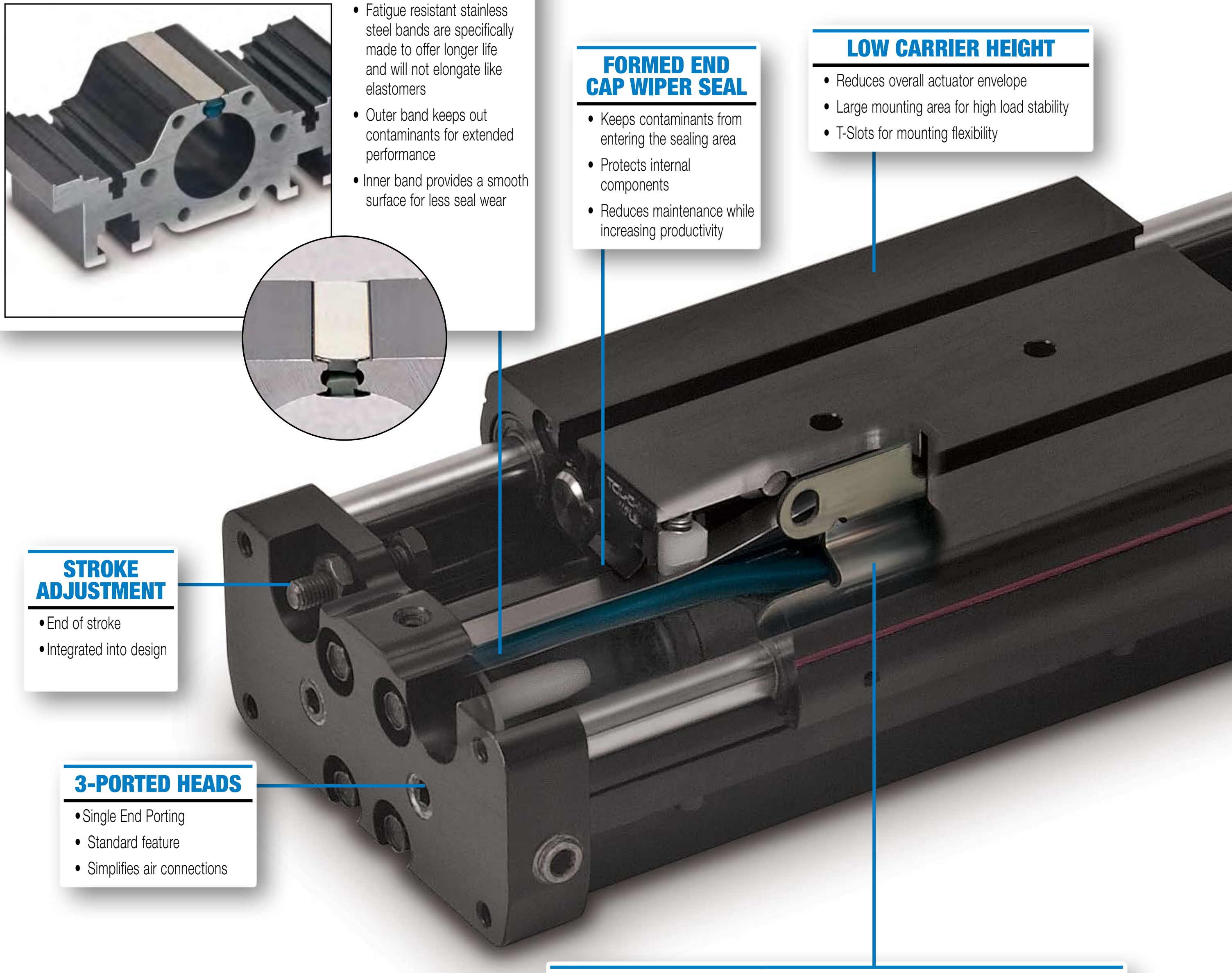

STAINLESS STEEL SEALING BAND SYSTEM

- Fatigue resistant stainless steel bands are specifically made to offer longer life and will not elongate like elastomers
- Outer band keeps out contaminants for extended performance
- Inner band provides a smooth surface for less seal wear

FORMED END CAP WIPER SEAL

- Keeps contaminants from entering the sealing area
- Protects internal components
- Reduces maintenance while increasing productivity

LOW CARRIER HEIGHT

- Reduces overall actuator envelope
- Large mounting area for high load stability
- T-Slots for mounting flexibility

STROKE ADJUSTMENT

- End of stroke
- Integrated into design

3-PORTED HEADS

- Single End Porting
- Standard feature
- Simplifies air connections

FORMED STEEL PISTON BRACKET

- Provides maximum strength at major stress points
- Heat treated carbon steel withstands the toughest dynamic forces
- Strongest bracket design in the industry assures long life with less maintenance

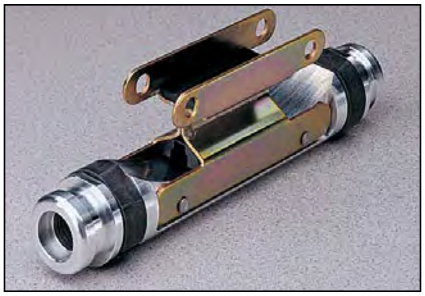

TOLOMATIC…THE RODLESS CYLINDER LEADER

STEEL GUIDE RODS

Two precision ground steel guide rods integrated with extrusion provides positive support of load

RETAINED DUST BAND

Retained dust band keeps contaminants from entering the cylinder interior, protecting components for reduced maintenance and increased uptime

RIGID BLACK- ANODIZED EXTRUDED ALUMINUM TUBE

- Stronger, stiffer tube retains tolerance specs when chamber is pressurized
- Keeps sealing band in place for maximized air efficiency
- Tube supports are minimized
- Solid structural support provides durability and long life performance

LOAD-BEARING CARRIER DESIGN

- Load and piston are independent - piston floats, resulting in less friction and longer seal life
- Bearings offer consistently low friction and long wear; 1/2" bore features composite bearings, 1" bore features precision linear ball bearings

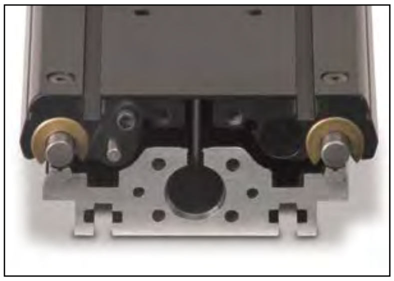

NOTE: Boxed letters indicate ordering codes

OPTIONS

AUXILIARY CARRIER $\boxed{D}\boxed{W}$ $\boxed{D}\boxed{O}$

- Substantially higher load capacity
- Substantially higher bending moment capacity

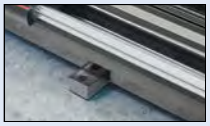

SUPPORTS $\boxed{M}\boxed{P}$

- Used for intermediate support
- Flush with bottom of actuator to retain low profile
- Drop-in, adjustable mounting locations

T-NUTS

- Used for intermediate support, combine with Tube Supports or mount directly to surface

SHOCK ABSORBERS $\boxed{S}\boxed{L}$ $\boxed{S}\boxed{H}$

- Smooth deceleration
- Allows increased operating speed
- Self-compensates for load or speed changes
- Minimizes impact load to equipment
- Higher equipment productivity
- Integrated to carrier design

SWITCHES

- Available in Proximity, Reed, Hall-effect and Triac
- 15ft. cable with flying leads; available with quick-disconnect couplers

LS10 Linear Slide Rodless Cylinder

PERFORMANCE

ABT
MXP
BC2
BC3
BC4
LS
MG
CC
PB
ENGR

LS10

LS010 OPTIONS	Page
Auxiliary Carrier	LS_6
Proximity Sensors	LS_11
Shock Absorbers	LS_12
Switches	LS_9
Supports	LS_8
MORE INFORMATION	**Page**
Ordering	LS_16
Selection	LS_14

BEARING LIFE vs LOAD

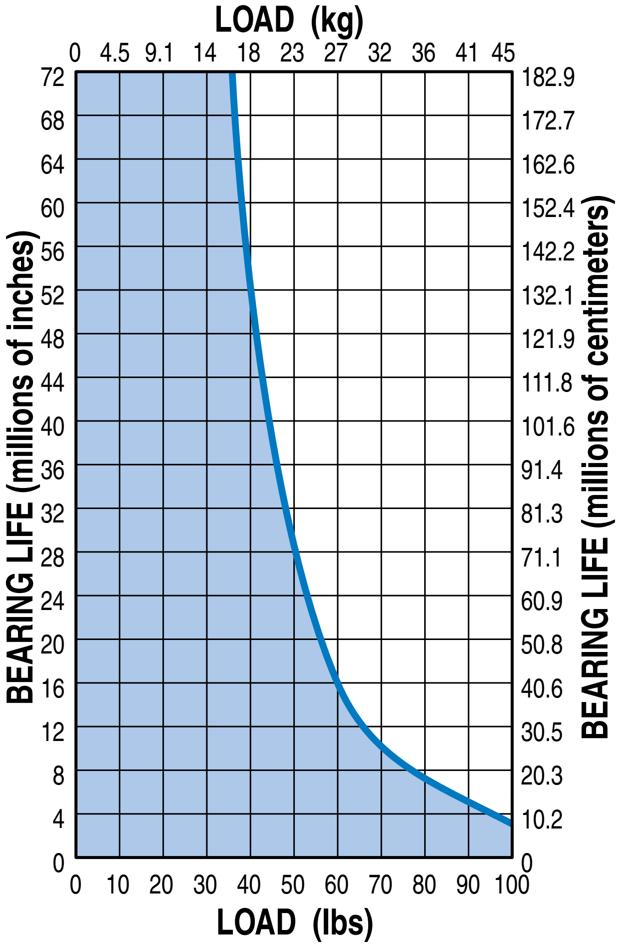

THEORETICAL FORCE vs PRESSURE

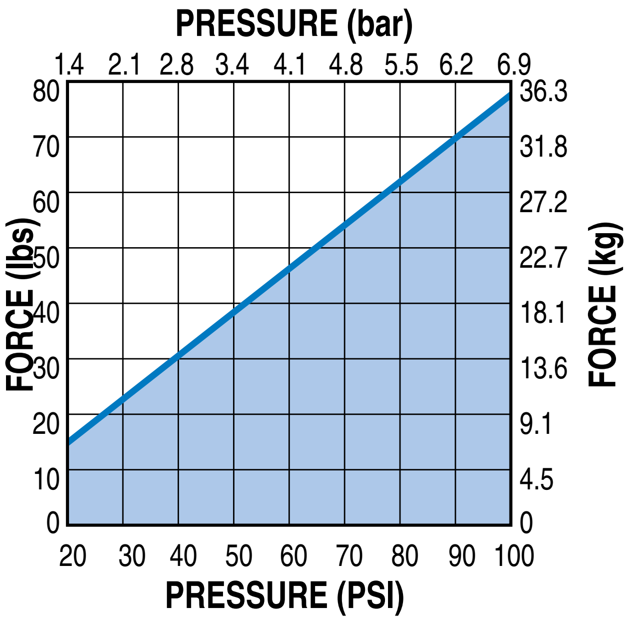

SPECIFICATIONS

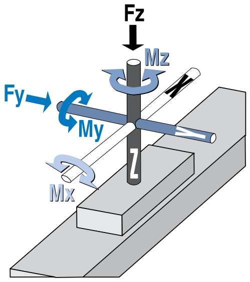

LS10 BENDING MOMENTS AND LOAD

	BORE SIZE	MAX. BENDING MOMENT			MAX. LOAD
		My	Mx	Mz	Fz
U.S.	1.00 in	80 in-lbs	80 in-lbs	125 in-lbs	100 lbs
Metric	25 mm	9.0 N-m	9.0 N-m	14.0 N-m	45.4 kg

LS10 Linear Slide Rodless Cylinder

DIMENSIONS

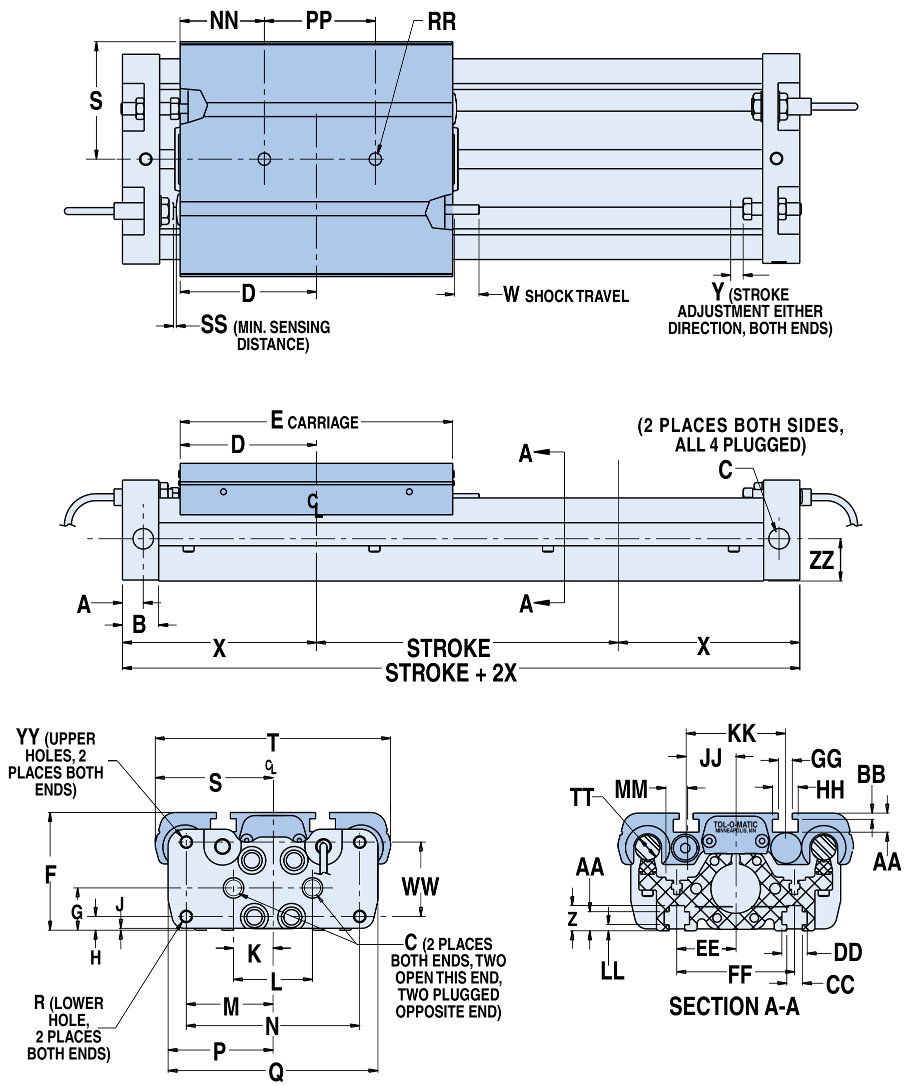

	U.S.	Metric
A	0.42	10.7
B	0.73	18.5
C	1/8 NPT PORT	G 1/8-28 Parallel
D	2.75	69.9
E	5.50	139.7
F	2.38	60.5
G	0.86	21.7
H	0.28	7.1
J	0.04	1.0
K	0.80	20.3
L	1.59	40.4
M	1.75	44.5
N	3.50	88.9
P	2.13	54.1
Q	4.25	107.9
R	1/4-20 x .50 DP	M6 x 1.0 x 12 DP
S	2.38	60.5
T	4.75	120.7
W	0.43	10.9
X	3.89	98.8
Y	0.25	6.4
Z	0.51	12.9
AA	0.39	9.8
BB	0.10	2.5
CC	0.31	7.9
DD	0.51	13.0
EE	1.19	30.2
FF	2.38	60.3
GG	0.28	7.1
HH	0.52	13.2
JJ	1.00	25.4
KK	2.00	50.8
LL	0.13	3.2
MM	0.44	11.1
NN	1.75	44.5
PP	2.00	50.8
RR	.25 x .20 DP	6.35 x 5.1 DP
SS	0.04	1.0
TT	.472 Nominal	12.0 Nominal
WW	1.50	38.1
YY	1/4-20 x .38 DP	M6 x 1.0 x 9 DP
	INCHES	MILLIMETERS

***SQUARE NUTS** (NOT TO SCALE)

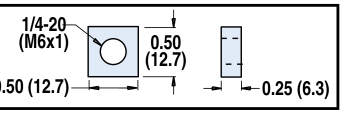

*NOTE: Four square nuts are provided with each linear slide for base mounting. Additionally 2 square nuts are provided for 30" of stroke and 2 for every 20" of stroke thereafter.

SPECIFICATIONS

	BORE SIZE	WEIGHT		MAX. STROKE LENGTH*	MAX. PRESSURE	TEMPERATURE RANGE	END-OF-STROKE POSITIONING ACCURACY	STROKE ADJUSTMENT
		BASE	PER UNIT OF STROKE					
U.S.	1.00 in	5.2 lbs	0.4 lbs/in	110 in	100 PSI	20° to 140° F	±0.0005 in	±0.25 in per end
Metric	25 mm	2.36 kg	0.181 kg/mm	2794 mm	6.895 bar	-7° to 60° C	0.0127 mm	±6.35 mm per end

***For longer strokes, alternate materials, mounting and/or fasteners – consult Tolomatic**

LS Auxiliary Carrier - All Sizes

PERFORMANCE

The auxiliary carrier option substantially increases load carrying and bending moments capacity over the standard single carrier models. As a general rule, the auxiliary carrier option is highly recommended in vertical applications (My) if the distance from the carrier mounting surface to the load center of gravity (CG) exceeds the overall length of the carrier. Auxiliary carriers can be ordered with (DW) or without (DO) an internal piston. (Auxiliary carriers without a piston have no cushion on the cylinder end closest to the auxiliary carrier.)

NOTE: breakaway pressure will increase when using auxiliary carrier.

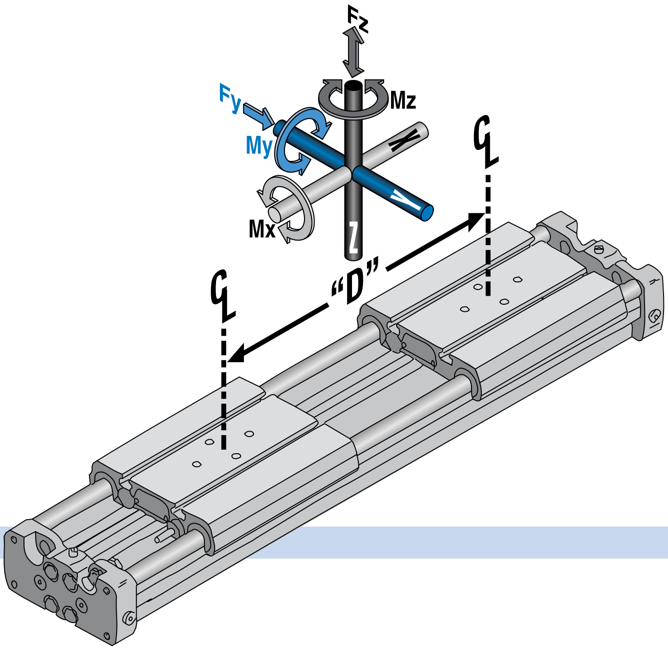

BENDING MOMENTS

LS10 AUXILIARY CARRIER LOAD vs DISTANCE

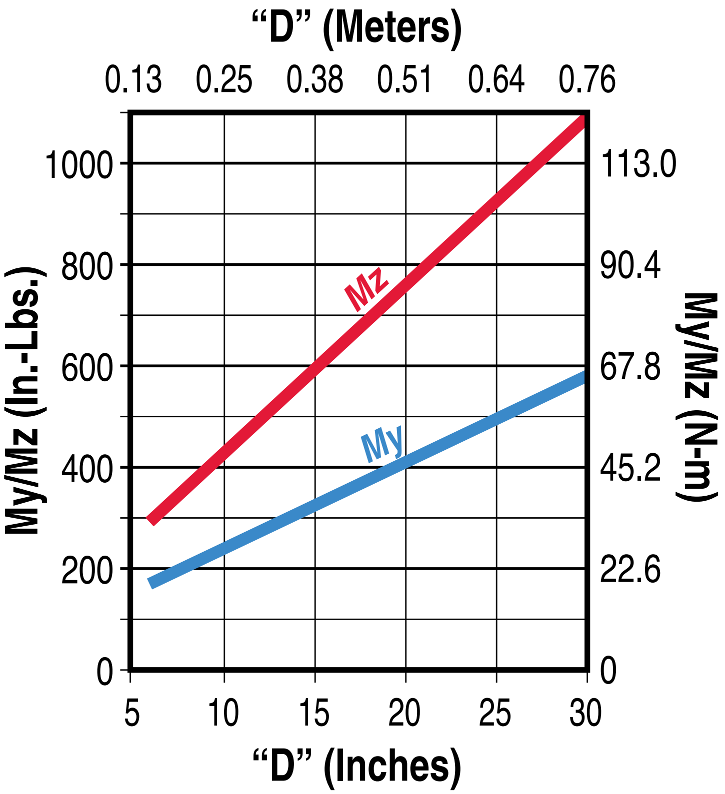

Rates were calculated with the following assumptions:

1.) Coupling between carriers is rigid.

2.) Load is equally distributed between carriers.

3.) Coupling device applies no misalignment loads to carriers.

	BORE SIZE		"D" MINIMUM *		MAX. BENDING MOMENT						MAX. LOAD	
					My**		Mx		Mz**		Fz	
	in	mm	in	mm	in-lbs	N-m	in-lbs	N-m	in-lbs	N-m	lbs	kg
10	1.00	25	5.75	146.1	177.80	20.09	160.00	18.08	277.80	31.30	200	90.8

* "D" is distance between carriers

** Loads calculated are at minimum "D", for substantially higher My and Mz loads increase "D" and refer to graph above

LS Auxiliary Carrier - All Sizes

AUXILIARY CARRIER

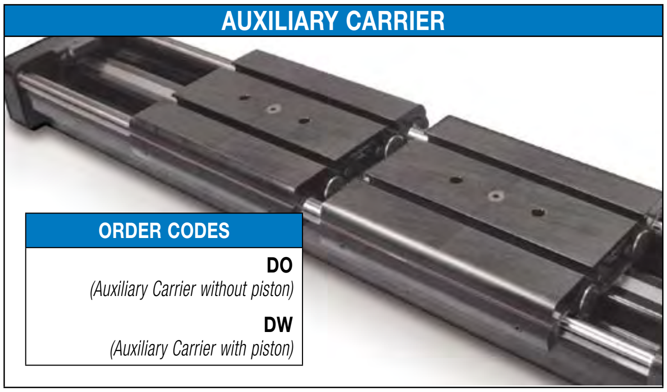

ORDER CODES

DO
(Auxiliary Carrier without piston)

DW
(Auxiliary Carrier with piston)

ORDERING INFORMATION

When ordering, determine the minimum distance required between carriers (dimension “D” in Auxiliary Carrier Bending Moments chart).

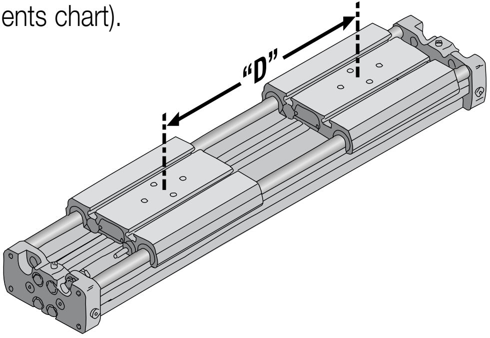

Determine your working stroke and your “D” dimension, then enter these into your configuration string. (Example: LS10SK30.00DW8.00RT2) The configurator will calculate the overall length of the actuator. Refer to page LS_16 for complete LS ordering information.

ASSEMBLY INFORMATION

IMPORTANT INFORMATION REGARDING AUXILIARY CARRIER PLACEMENT

When an LS is ordered without shock absorbers, the auxiliary carrier is always placed to the left (while facing the switch mounted or open port side) of the main carrier.

When an LS is ordered with shock absorbers, the auxiliary carrier is always placed to the right (while facing the switch mounted or open port side) of the main carrier.

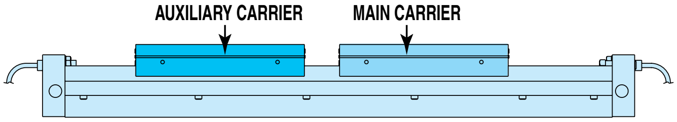

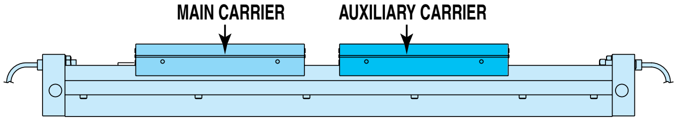

LS Supports - All Sizes

PERFORMANCE

DISTANCE BETWEEN SUPPORTS

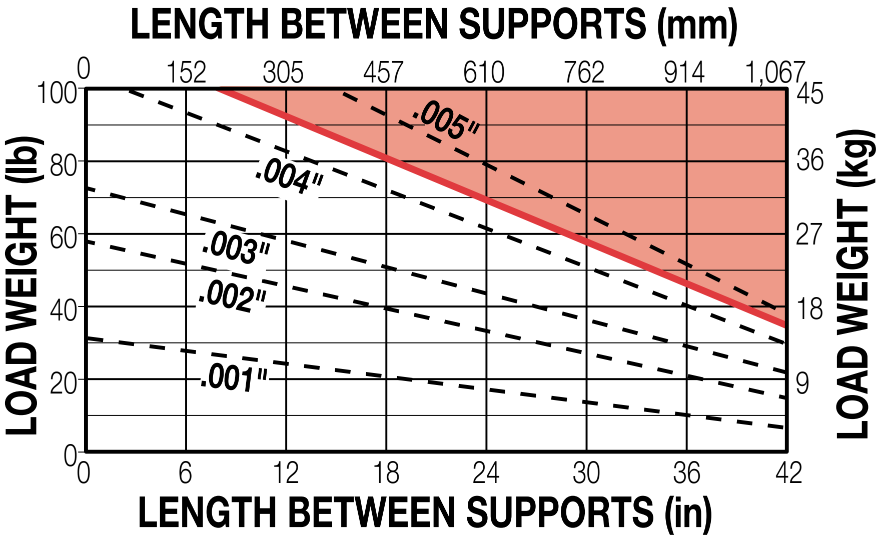

- - Deflection Rates

Tube supports recommended above this line.

MP SUPPORTS

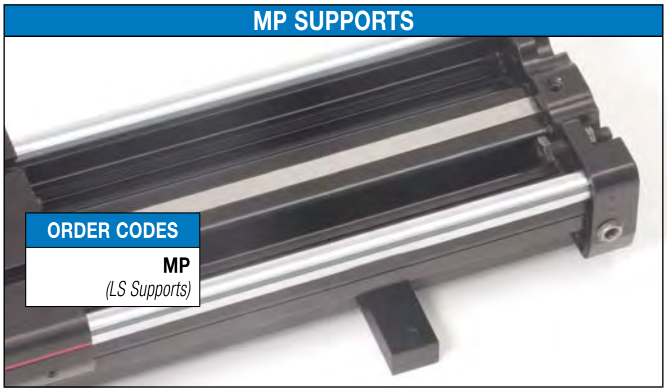

ORDER CODES

MP
(LS Supports)

Base mounting linear slides may be accomplished by fastening directly to “T” slot nuts provided in the base of the slide (shown at right) or by using the MP mounting plates.

SQUARE NUTS

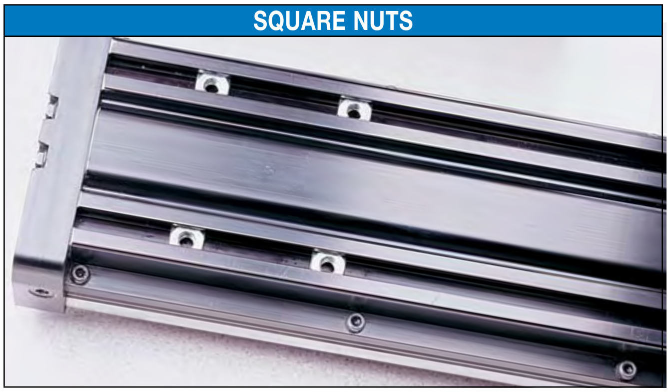

*NOTE: Four square nuts are provided with each linear slide for base mounting. Additionally 2 square nuts are provided for 30” of stroke and 2 for every 20” of stroke thereafter.

DIMENSIONS

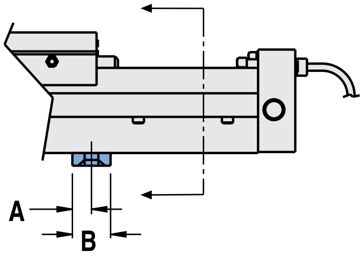

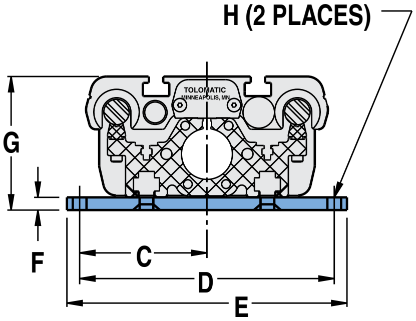

	BORE SIZE	A	B	C	D	E	F	G	H Ø
10	1.00	0.38	0.75	2.50	5.00	5.50	0.25	2.63	0.270

Dimensions in inches

	BORE SIZE	A	B	C	D	E	F	G	H Ø
10	*25*	*9.7*	*19.1*	*63.5*	*127.0*	*139.7*	*6.4*	*66.8*	*6.86*

Dimensions in millimeters

LS Switches - All Sizes

SWITCHES

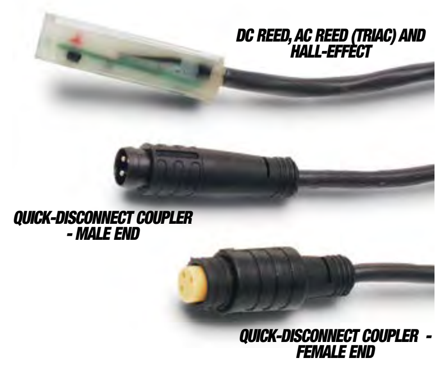

There are 10 sensing choices: DC reed, form A (open) or form C (open or closed); AC reed (Triac, open); Hall-effect, sourcing, PNP (open); Hall-effect, sinking, NPN (open); each with either flying leads or QD (quick disconnect). Commonly used to send analog signals to PLC (programmable logic controllers), TLL, CMOS circuit or other controller device. These switches are activated by the actuator's magnet.

Switches contain reverse polarity protection. QD cables are shielded; shield should be terminated at flying lead end.

If necessary to remove factory installed switches, be sure to reinstall on the same of side of actuator with scored face of switch toward internal magnet.

SPECIFICATIONS

	REED DC				REED AC		HALL-EFFECT DC			
ORDER CODE	RT	RM	BT	BM	CT	CM	TT	TM	KT	KM
LEAD	5m	QD*	5m	QD*	5m	QD*	5m	QD*	5m	QD*
CABLE SHIELDING	Unshielded	Shielded†	Unshielded	Shielded†	Unshielded	Shielded†	Unshielded	Shielded†	Unshielded	Shielded†
SWITCHING LOGIC	"A" Normally Open		"C" Normally Open or Closed		Triac Normally Open		PNP (Sourcing) Normally Open		NPN (Sinking) Normally Open	
MECHANICAL CONTACTS	Single-Pole Single-Throw		Single-Pole Double-Throw		Single-Pole Single-Throw		NO, These Are Solid State Components			
COIL DIRECT	Yes		Yes		Yes		—			
POWER LED	None		None		None		None		None	
SIGNAL LED	Red						Red		Red	
OPERATING VOLTAGE	200 Vdc max.		120 Vdc max.		120 Vac max.		5 - 25 Vdc			
OUTPUT RATING	—				—		25 Vdc, 200mA dc			
OPERATING TIME	0.6 msec max. (including bounce)		0.7 msec max. (including bounce)		—		< 10 micro sec.			
OPERATING TEMPERATURE	-40°F [-40°C] to 158°F [70°C]						0°F [-18°C] to 150°F [66°C]			
RELEASE TIME	1.0 msec. max.				—		—			
ON TRIP POINT	—				—		150 Gauss maximum			
OFF TRIP POINT	—				—		40 Gauss minimum			
**POWER RATING (WATTS)	10.0[§]		3.0[§§]		10.0		5.0			
VOLTAGE DROP	2.6 V typical at 100 mA		NA		—		—			
RESISTANCE	0.1 Ω Initial (Max.)				—		—			
CURRENT CONSUMPTION	—				1 Amp at 86°F [30°C]	0.5 Amp at 140°F [60°C]	200 mA at 25 Vdc			
FREQUENCY	—				47 - 63 Hz		—			
CABLE MIN. BEND RADIUS STATIC	0.630" *[16mm]*									
DYNAMIC	Not Recommended									

CAUTION: DO NOT OVER TIGHTEN SWITCH HARDWARE WHEN INSTALLING!

** **WARNING**: Do not exceed power rating (Watt = Voltage X Amperage). Permanent damage to sensor will occur.

*QD = Quick Disconnect; Male coupler is located 6" [152mm} from sensor,
Female coupler to flying lead (part #2503-1025) distance is 197" [5m] also see Cable Shielding specification above

REPLACEMENT OF QD SWITCHES MANUFACTURED BEFORE JULY 1, 1997: It will be necessary to replace or rewire the female end coupler.

CURRENT
Quick disconnect Wiring

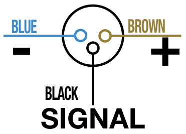

OLD
Quick disconnect Wiring

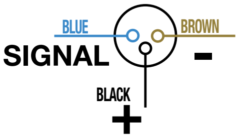

Reed Switch Life Expectancy: Up to 200,000,000 cycles (depending on load current, duty cycle and environmental conditions)

[†] Shielded from the female quick disconnect coupler to the flying leads. Shield should be terminated at flying lead end.

[§] Maximum current 500mA (not to exceed 10VA) Refer to Temperature vs. Current graph and Voltage Derating graph

[§§] Maximum current 250mA (not to exceed 3VA) Refer to Temperature vs. Current graph and Voltage Derating graph

LS Switches - All Sizes

PERFORMANCE

TEMP. vs CURRENT, DC REED

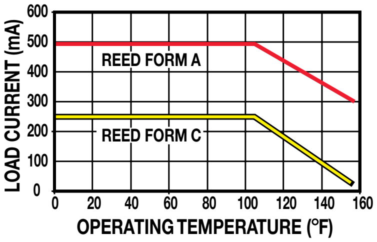

TEMP. vs CURRENT, AC REED

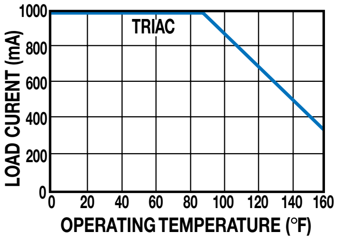

VOLTAGE DERATING, DC REED

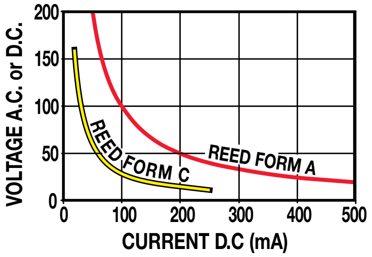

WIRING DIAGRAMS

RT & RM DC REED, FORM A

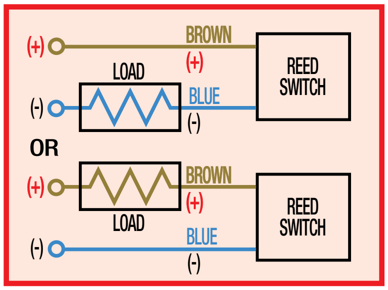

CT & CM AC REED, TRIAC

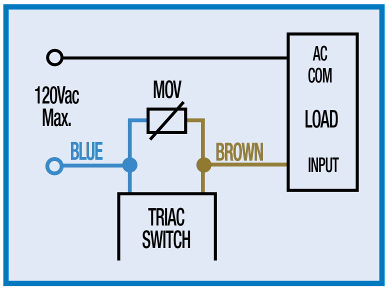

BT & BM DC REED, FORM C

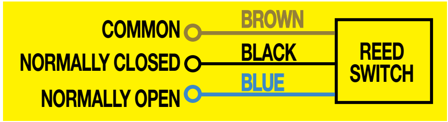

TT & TM HALL-EFFECT, SOURCING, PNP

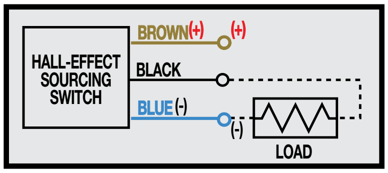

KT & KM HALL-EFFECT, SINKING, NPN

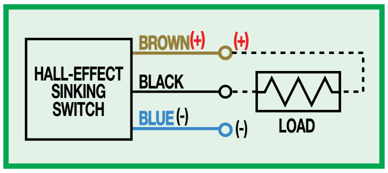

INSTALLATION INFORMATION

⚠ THE NOTCHED FACE OF THE SWITCH INDICATES THE SENSING SURFACE AND MUST FACE TOWARD THE MAGNET.

DIMENSIONS

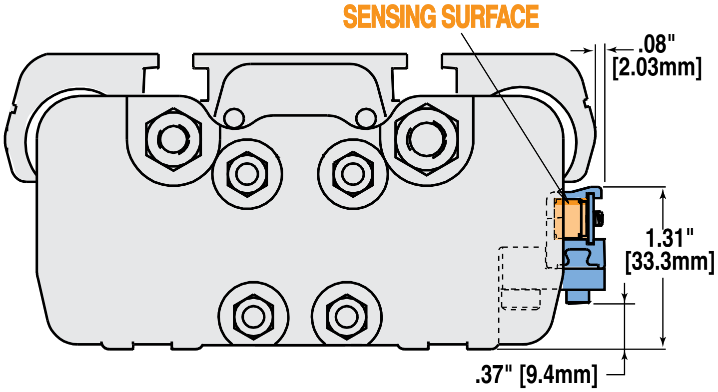

LS Proximity Sensors - All Sizes

Proximity Sensor

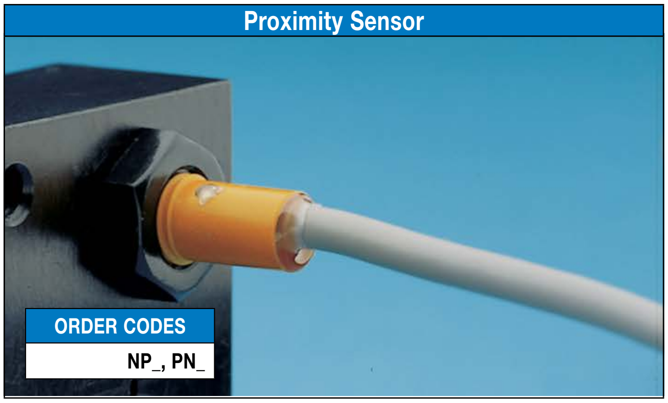

ORDER CODES

NP_, PN_

This L.E.D. device senses end-of-stroke with one of two normally open inductive d.c. proximity sensors. NPN supplies a sinking signal; PNP supplies a sourcing signal to a device such as a programmable logic controller.

Ambient Temp.: -13° to 158° F., (-25° to 70° C.)

NEMA Encl. Rating: 1, 3, 4, 6, 12, 13

Lead Length: 6.56 feet (2.0m)

Max. Sensing Distance (LS10): .039” (1.0mm)

Wiring Diagrams

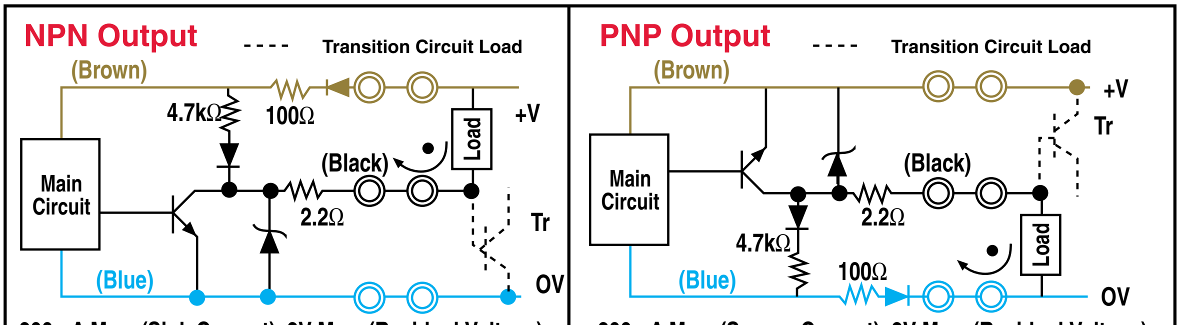

200mA Max. (Sink Current), 2V Max. (Residual Voltage)

200mA Max. (Source Current), 2V Max. (Residual Voltage)

NPN Output

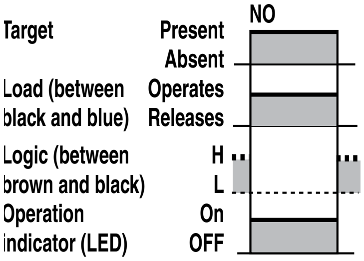

Short-Circuit Indication

The load output immediately turns off and remains off until the short-circuit protection is reset.

PNP Output

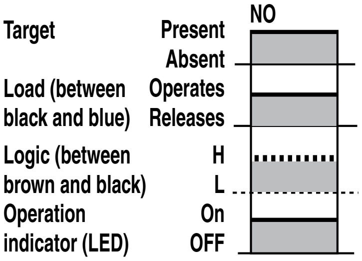

Resetting Short-Circuit Protection

To reset the short-circuit protection, repair the short. The short-circuit protection will then automatically reset.

DIMENSIONS

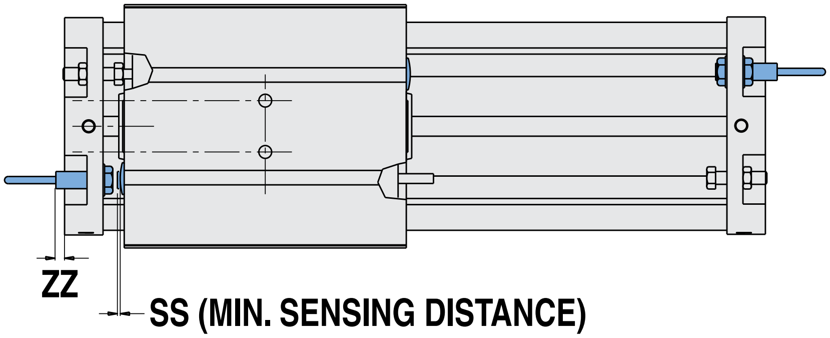

SIZE	BORE		SS		ZZ	
	in	*mm*	in	*mm*	in	*mm*
10	1.00	*25.4*	0.04	*1.02*	0.40	*10.16*

LS Shock Absorbers - All Sizes

SHOCK ABSORBERS

ORDER CODE

SH_ or SL_

(_ = Number ordered)

Rodless cylinders with standard internal cushion offer an effective method of decelerating loads. However, all Tolomatic rodless cylinders are capable of carrying heavier loads at higher velocities than the cylinder cushion can absorb. Optional shock absorbers can be used to increase the cylinder's life and broaden the application range for the cylinder model you have chosen.

Typical shock absorber life varies between 1-2 million cycles (depending on environment). Appropriate preventative maintenance should be considered in high cyclic applications.

NOTE: Actuators ordered without selecting a shock absorber MUST have external stops. The LS does NOT have internal bumpers or cushions.

⚠ CAUTION: In applications which result in a load bending moment at deceleration, care should be taken to decelerate the load rather than the carrier of the band cylinder.

DIMENSIONS

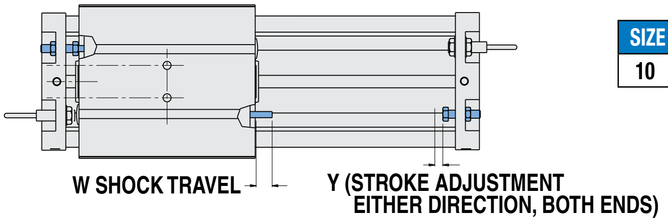

SIZE	BORE	W	Y
10	0.625	0.43	0.25

Dimensions in inches

SIZE	BORE	W	Y
10	25	10.9	6.4

Dimensions in millimeters

PERFORMANCE

VELOCITY vs LOAD

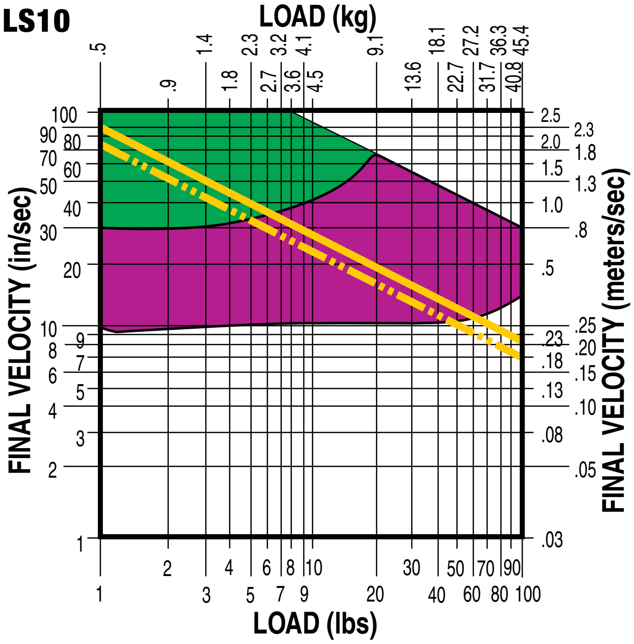

🟩 LIGHT DUTY (Light load/High velocity)

🟪 HEAVY DUTY (Heavy load/Low velocity)

Application Data Worksheet

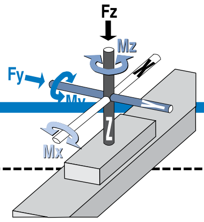

STROKE LENGTH ______________

☐ inch (SK)
(U.S. Standard)

☐ millimeters (SM)
(Metric)

AVAILABLE AIR PRESSURE _____

☐ PSI
(U.S. Standard)

☐ bar
(Metric)

REQUIRED THRUST FORCE _____

☐ lbf
(U.S. Standard)

☐ N
(Metric)

LOAD ______________________

☐ lb
(U.S. Standard)

☐ kg
(Metric)

LOAD CENTER OF GRAVITY DISTANCE TO CARRIER CENTER

d_x _______
d_y _______
d_z _______

☐ inch
(U.S. Standard)

☐ millimeters
(Metric)

FORCES APPLIED TO CARRIER

F_z _______
F_y _______

☐ lbf
(U.S. Standard)

☐ N
(Metric)

BENDING MOMENTS APPLIED TO CARRIER

M_x _______
M_y _______
M_z _______

☐ in-lbs
(U.S. Standard)

☐ N-m
(Metric)

FINAL VELOCITY ______________

☐ in/sec
(U.S. Standard)

☐ mm/sec
(Metric)

MOVE TIME sec. ______________

NO. OF CYCLES ______________

☐ per minute

☐ per hour

ORIENTATION

☐ Horizontal

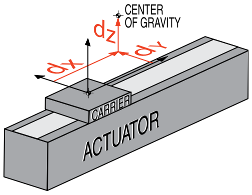

☐ Side

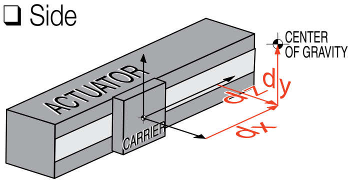

☐ Horizontal Down

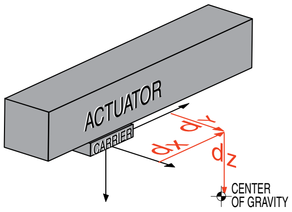

☐ Vertical

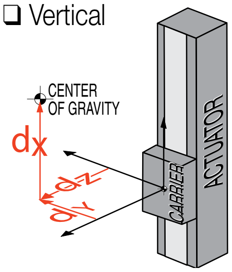

☐ Angled α ______ β ______

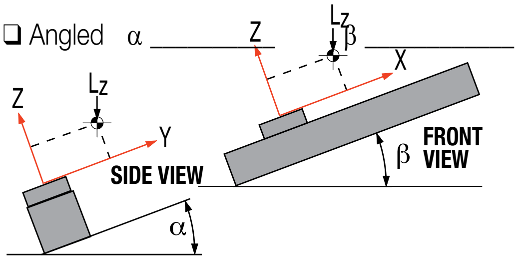

OTHER ISSUES:
(i.e. Environment,
Temperature,
Contamination, etc.)

Contact information:

Fax (1-763-478-8080) or call Tolomatic (1-800-328-2174) with the above information.
We will provide any assistance needed to determine the proper actuator.

Rodless Cylinder Selection Guidelines - BC2, BC3, BC4, LS - All Sizes

PROVIDING LOAD GUIDANCE AND SUPPORT

The process of selecting a load bearing actuator for a given application can be complex. It is highly recommended that you contact Tolomatic or a Tolomatic Distributor for assistance in selecting the best actuator for your application. The following overview of the selection guidelines are for educational purposes only.

1

COMPILE APPLICATION REQUIREMENTS

To determine the appropriate Band Cylinder or Linear Slide model for an application, compile the following information:

- Available pressure (PSI)
- Weight of load (lbs or kg)
- Orientation of load (lbs or kgs)
- Velocity of load (in/sec or mm/sec)
- Stroke length (in or mm)

HINT: Use Tolomatic sizing and selection software, download at: tolomatic.com

2

SELECT CYLINDER SIZE

- Consult the Theoretical Force vs. Pressure charts.
- Cross-reference the load force (or load weight if force is not known) and the available operating pressure. If the intersection falls below the diagonal line, and if moments do not exceed maximum values listed for that model (see Step 3), the actuator will accommodate the application.

  If the intersection is above the diagonal line, a larger cylinder bore size should be considered.

NOTE: Additional force may be required to obtain the necessary acceleration for vertical or horizontal loads.

3

DETERMINE NATURE OF LOAD AND THE EFFECT OF BENDING MOMENTS

If the cylinder will guide and support a load located directly over the center of carrier, bending moments will not be a factor in the cylinder selection.

NOTE: The maximum load “L” must not exceed the capacity limits of the cylinder selected.

- Bending Moments

  For off center or side loads, determine the distance from the center of mass of the load to the center of the carrier bracket. This measurement is needed to calculate the torque for bending moments. (Refer to Bending Moment chart for each model.)

  Should the resulting maximum bending moment exceed figures indicated on the chart, external guides, auxiliary carrier/s or a larger cylinder should be considered.

- Auxiliary Carrier Bending Moments

  The auxiliary carrier option (available on most models) increases load carrying capacity and bending moments. Auxiliary carriers can be ordered with or without an internal piston. (Auxiliary carriers without a piston have no internal cushion on the cylinder end closest to the auxiliary carrier.)

  IMPORTANT: When ordering, determine the working stroke, then the minimum distance required between carriers (dimension “D” in Auxiliary Carrier Bending Moments chart). When ordered, Tolomatic’s configurator will calculate the overall length of the actuator.

NOTE: breakaway pressure will increase when using auxiliary carriers.

4

DETERMINE INTERNAL CUSHION CAPACITY

- Consult the Cushion Data chart for the model selected. The velocities listed on the cushion charts are final or cushion impact velocities. On applications where the internal cushions or bumpers are to be used, be sure the actual, final or impact velocity is known. If the velocity is not known, use of limit switches with valve deceleration circuits or shock absorbers should be considered. NOTE: The BC205 uses external bumpers in place of internal cushions, LS10 does not have cushions or bumpers.
- Cross-reference the final velocity and weight of the load. If the intersection is below the diagonal lines, the internal cushions on the actuator may be used. If the point falls above the dashed diagonal line or if the velocity is not known, use deceleration circuits, external shock absorbers or select a larger cylinder with greater cushion capacity. On high-cyclic applications, use of external stops is strongly recommended.

5

DETERMINE TUBE SUPPORT REQUIREMENTS

- Consult the Tube Support chart for the model selected.
- Cross reference the load weight and maximum distance between supports.

6

CONSIDER OPTIONS

- Switches– dc Reed, Hall-effect or ac Triac

Band Cylinders and Linear Slides each have different standard features and options. Check the options section for the actuator you have selected.

- Shock Absorbers– if needed.
- Foot Mounting Kits
- Floating Mount Bracket – use when lack of parallelism occurs between the cylinder and an external guided and supported load.
- Single End Porting (BC3, BC4)
- Long Carrier (BC4)
- Proximity Sensors (LS)
- Dual 180° Carrier (BC3)

LS Service Parts Ordering - ALL Sizes

	Inch (U.S. Standard)		Metric	
SIZE	**05[7]**	**10**	**05[7]**	**10**
Support[1]	0605-9010	0610-9010	5605-9010	5610-9010
Inductive DC Proximity Sensors - 10-24 volts NPN NO Sink[2]	0605-1023	0610-1023	0605-1023	0610-1023
Inductive DC Proximity Sensors - 10-24 volts PNP NO Source[2]	0605-1024	0610-1024	0605-1024	0610-1024
Switch Rail and Rail Hardware (specify stroke)[3]	0605-9100SK_	0610-9100SK_	0605-9100SK_	0610-9100SK_
Shock Absorbers Field Retrofit Kit - Heavy Duty[4,5]	0605-9009	0610-9023	0605-9009	0610-9023
Shock Absorbers Field Retrofit Kit - Lite Duty[4,5]	0605-9008	0610-9022	0605-9008	0610-9022
T-Nuts (Each)	0605-1042	0610-1042	5605-1042	5610-1042
Configurated Repair Kit[6]	RKLS05NPSK_	RKLS10NPSK_	RKLS05TP(GP)SK_	RKLS10TP(GP)SK_
Configurated Repair Kit (Manufactured before May 1, 1998)[6]	RKLS05NPSK_	0610-9033SK_	RKLS05SK_	0610-9033SK_

Service Parts Ordering NOTES:

[1] Support Kit contains one bracket and two screws

[2] Proximity sensors for the LS05 have 5mm thread size;
LS10 have 8mm thread size

[3] When replacing an existing switch on an actuator manufactured BEFORE 7-1-1997 switch rail and hardware must be ordered stroke length is required. Order switch using Configurator Code in table at left.

[4] Shock absorber kit includes one shock and mounting hardware

[5] NOTE: Actuators ordered without selecting a shock absorber MUST have external stops. The LS does NOT have internal bumpers or cushions.

[6] Repair Kit for LS contains external dust band, internal seal band, wipers, end caps and internal soft seals. Stroke length must be included after number or code.

[7] LS05 discontinued March 2022, contact Tolomatic regarding service parts availability.

NA = Not Available

Repair Kit ordering method: RK LS _ _ _ S _ _ _ _ _ _ _ _ DW _ _ _ _ _

EXAMPLE: RK LS 10 S SM2007·02 DW215·9

Repair Kit
Model
Bore Size
Bearing Type
Stroke Length
Auxiliary Carrier Length

	CONFIG. CODE ORDERING **Mounting Hardware & FE conn. included**
DESCRIPTION	**CODE**
Switch Kit, Reed, Form C, 5m	BT
Switch Kit, Reed, Form C, Male Conn.	BM
Switch Kit, Reed, Form A, 5m	RT
Switch Kit, Reed, Form A, Male Conn.	RM
Switch Kit, Triac, 5m	CT
Switch Kit, Triac, Male Conn.	CM
Switch Kit, Hall-effect, Sinking, 5m	KT
Switch Kit, Hall-effect, Sinking, Male Conn.	KM
Switch Kit, Hall-effect, Sourcing, 5m	TT
Switch Kit, Hall-effect, Sourcing, Male Conn.	TM

NOTE: When kit is ordered female connector & all mounting hardware is included

Switch ordering method*: SW LS _ _ _ _ _ _

EXAMPLE: SW LS 10 N RK 2

Switch Kit
Model
Bore Size
Bearing Type
Switch Type
Quantity

*will include mating female QD cable if required

Switch Ordering NOTES:

To order field retrofit switch and hardware kits for all Tolomatic actuators: SW (Then the model and bore size, and type of switch required)
Example: SWLS10RT
(Hardware and Form A Reed switch with 5 meter lead for 1.0" bore LS linear slide)

⚠ Replacing an existing switch on an actuator manufactured BEFORE 7-1-1997
Order using CONFIGURATOR CODE in table above
Also order SWITCH RAIL and RAIL HARDWARE
If replacing a quick-disconnect switch on an actuator manufactured BEFORE 7-1-1997 it will also be necessary to replace or require the female-end coupler with the in-line splice (see page LS_9)

⚠ Adding a switch to an actuator manufactured without switches
Order using CONFIGURATOR CODE in table above
Also order SWITCH RAIL and RAIL HARDWARE

LS Ordering - All Sizes

MODEL, BORE, STROKE | **OPTIONS**

LS 10 NP SK55.250 DW6.0 MP3 SH2 BM2

MODEL & MOUNTING

LS	LS Linear Slide

BORE SIZE

10	1.00" *(25mm)*

MOUNTING & PORTS

NP	US standard mounting & NPT ports
TP†	Metric mounting with metric taper ports
GP†	Metric mounting with metric parallel ports

† The metric version provides metric tapped holes for mounting of the load to the carrier and of the actuator to mounting surfaces & metric ports

STROKE LENGTH & MOUNTING TYPE

SK _ _ ._ _	Stroke, enter desired stroke length in inches
SM† _ _ ._ _	Stroke, enter desired stroke length in millimeters

NOTE: Actuator mounting threads and mounting fasteners will be either inch or metric; depending on how stroke length is indicated.

SK = inch mounting
SM = metric mounting

MAXIMUM STROKE

	...SK	...SM
SIZE	in	*mm*
10	110	*2,794*

Not all codes listed are compatible with all options. Contact Tolomatic with any questions.

See page BC3_25 for application guidelines

AUXILIARY CARRIER (LS_8)

DW	Auxiliary carrier With piston & "D" distance
DO	Auxiliary carrier Without piston & "D" distance
_ _._ _	"D" Distance between carriers in inches (**SK**) or millimeters (**SM**)

MINIMUM "D" DISTANCE BETWEEN CARRIERS

	in	*mm*
10	5.17	*131*

***When ordering auxiliary carrier option, enter the distance required between carriers. The configurator will calculate the overall length of the actuator.**

SUPPORTS (LS_10)

MP_	Support & number required

*NOTE: Four square nuts are provided with each linear slide for base mounting. Additionally 2 square nuts are provided for 30" of stroke and 2 for every 20" of stroke thereafter.

SHOCK ABSORBERS (LS_14)

SH_	Shock, Heavy duty and number required
SL_	Shock, Light duty and number required

NOTE: Actuators ordered without selecting a shock absorber MUST have external stops. The LS does NOT have internal bumpers or cushions.

PROXIMITY SENSOR (LS_13)

NP_	Sinking type proximity sensor (NPN)
PN_	Sourcing type proximity sensor (PNP)

SWITCHES (LS_11)

(Quantity desired follows ordering code)

RM_	Reed Switch (Form A) with 5-meter lead/QD (Quick-disconnect)
RT_	Reed Switch (Form A) with 5-m lead
BM_	Reed Switch (Form C) with 5-meter lead/QD
BT_	Reed Switch (Form C) with 5-m lead
KM_	Hall-effect Sinking Switch with 5-meter lead/QD
KT_	Hall-effect Sinking Switch w/ 5-m lead
TM_	Hall-effect Sourcing Switch with 5-meter lead/QD
TT_	Hall-effect Sourcing Switch with 5-meter lead
CM_	TRIAC Switch with 5-meter lead/QD
CT_	TRIAC Switch with 5-meter lead
MDR	Dual Magnet (Reed, Hall-effect, Triac)

Tolomatic™
EXCELLENCE IN MOTION

MAGNETICALLY COUPLED SLIDES & CYLINDERS

CONTENTS

MAG COUPLED SLIDE & CYLINDER

ENDURANCE TECHNOLOGY℠

A Tolomatic Design Principle

Endurance Technology features are designed for maximum durability to provide extended service life.

With magnetically coupled cylinders there is no mechanical connection of the carrier to the piston. The fully enclosed actuator body prevents contaminants from entering or escaping the actuator body. The perfect choice for applications where there are environmental concerns. Features internal polyurethane bumpers for dampened end-of-travel impact, anodized aluminum heads and actuator block, and a field-repairable design to practically eliminate maintenance downtime.

Air or oil actuated to 100 PSIG. With no mechanical piston connection, the actuator block can be easily rotated for increased mounting flexibility.

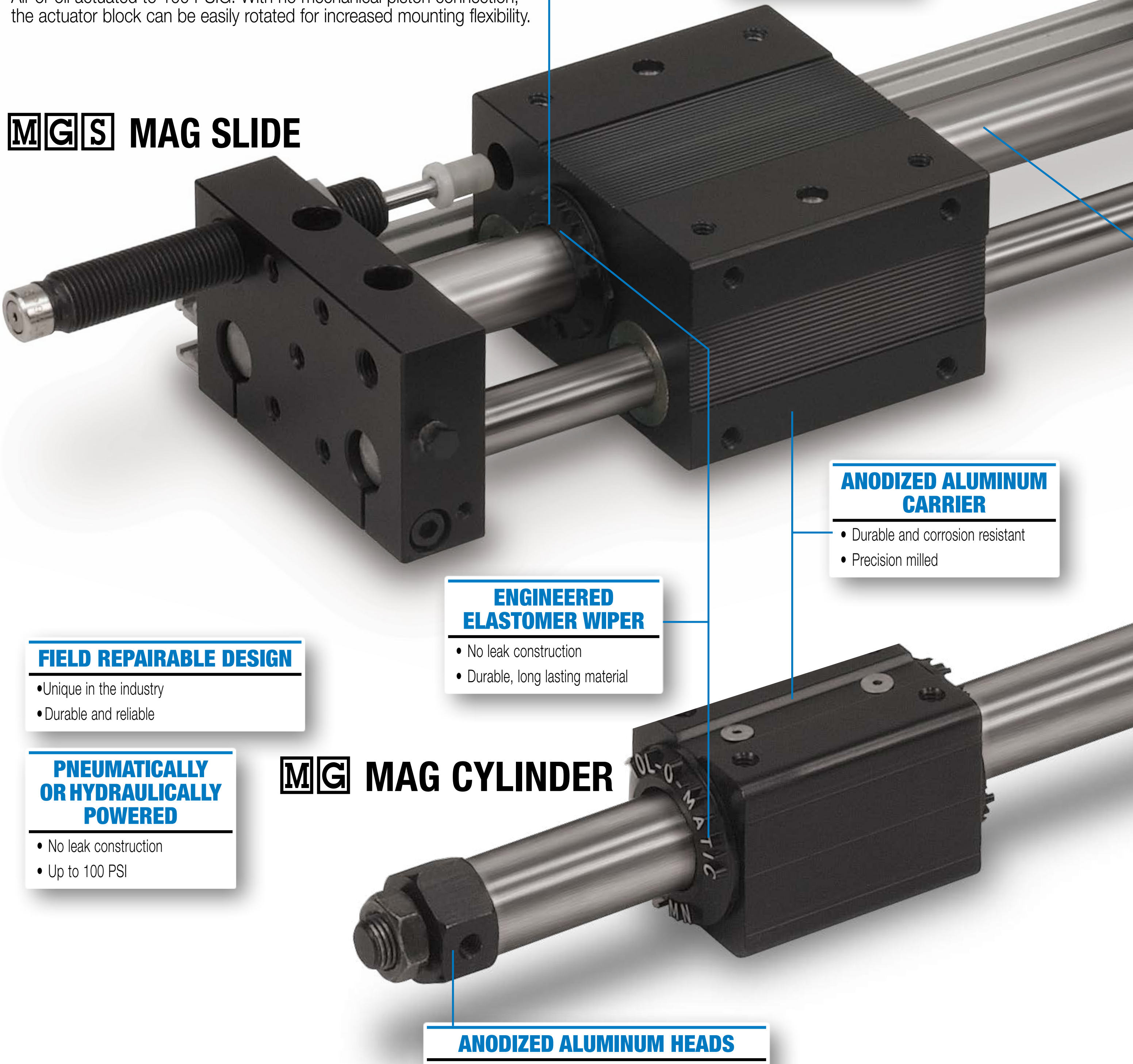

MGS MAG SLIDE

MG MAG CYLINDER

BEARING CHOICE

- Precision linear ball bearing or
- Sintered bronze

ANODIZED ALUMINUM CARRIER

- Durable and corrosion resistant
- Precision milled

ENGINEERED ELASTOMER WIPER

- No leak construction
- Durable, long lasting material

FIELD REPAIRABLE DESIGN

- Unique in the industry
- Durable and reliable

PNEUMATICALLY OR HYDRAULICALLY POWERED

- No leak construction
- Up to 100 PSI

ANODIZED ALUMINUM HEADS

Durable and corrosion resistant

TOLOMATIC…THE RODLESS CYLINDER LEADER

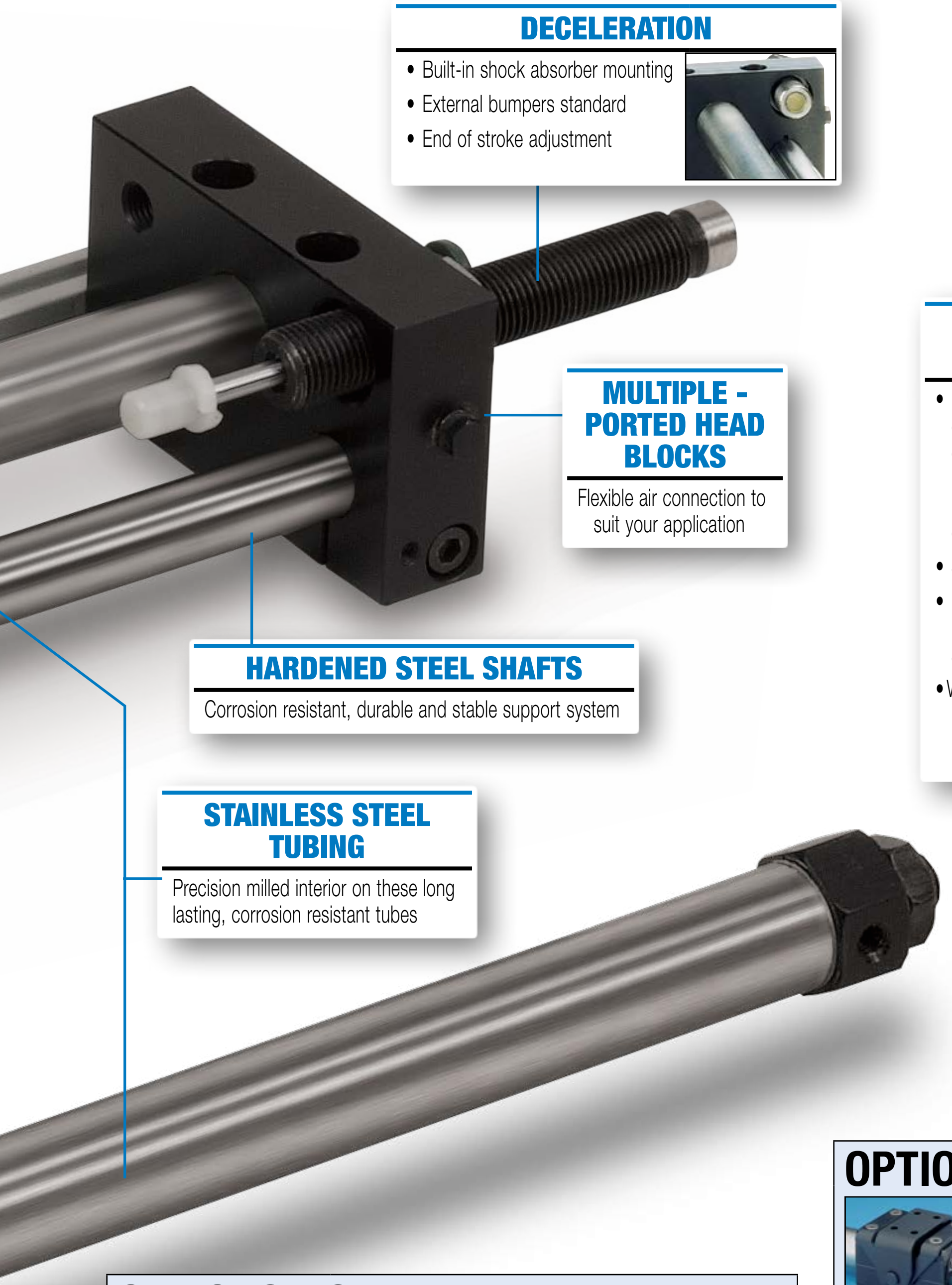

DECELERATION

- Built-in shock absorber mounting
- External bumpers standard
- End of stroke adjustment

MULTIPLE - PORTED HEAD BLOCKS

Flexible air connection to suit your application

HARDENED STEEL SHAFTS

Corrosion resistant, durable and stable support system

STAINLESS STEEL TUBING

Precision milled interior on these long lasting, corrosion resistant tubes

MAGNETIC FORCE CONNECTS PISTON TO CARRIER

- Rare earth magnets create positive connecton between piston and carrier
- 3 coupling strengths
- Decouples at known force (useful in a variety of applications)
- Wear bearing for long life

OPTIONS - SLIDE

SHOCK ABSORBERS SL SH

- Smoother deceleration
- Self-compensates for load changes
- Reduces need for equipment maintenance

PROXIMITY SENSOR

- L.E.D. deivce senses end-of-stroke with one of two normally open inductive dc proximity sensors.

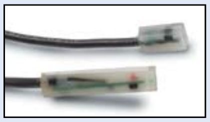

SWITCHES

- Available in Reed, Hall-effect and Triac
- 15ft. cable with flying leads; available with quick-disconnect couplers

OPTIONS - CYLINDER

FLOATING MOUNT BRACKET FL

- Compensates for non-parallelism between cylinder and independently guided load
- Makes installation easier, increases actuator block bearing life

FOOT MOUNT FM

- Best mounting choice in most applications
- Made from plated stamped steel

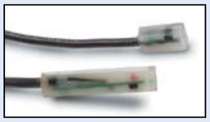

SWITCHES

- Available in Reed, Hall-effect and Triac
- 15ft. cable with flying leads; available with quick-disconnect couplers

CORROSION RESISTANT

- Stainless steel components with seals for use in harsh environments

MG Magnetically Coupled Cylinder - All Sizes

PERFORMANCE

MGA, MGB, MGC

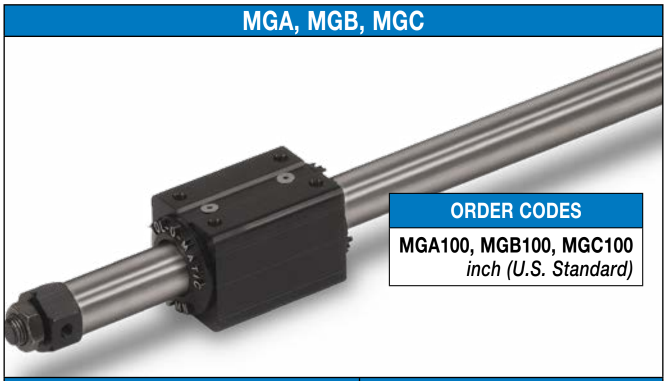

ORDER CODES

MGA100, MGB100, MGC100
inch (U.S. Standard)

MG OPTIONS	Page
Floating Mount Bracket	MG_9
Foot Mounts	MG_8
Switches	MG_10
MORE INFORMATION	**Page**
Application Guidelines	MG_18
Ordering	MG_19
Selection	MG_16

THEORETICAL FORCE vs PRESSURE

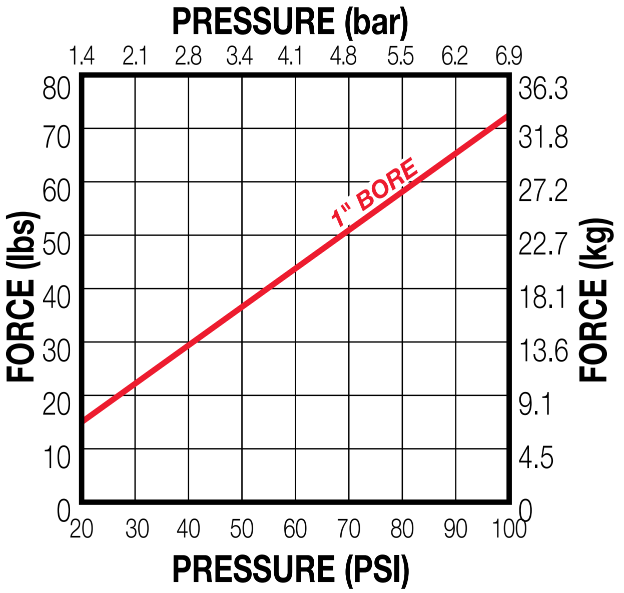

MAGNETIC COUPLING STRENGTH

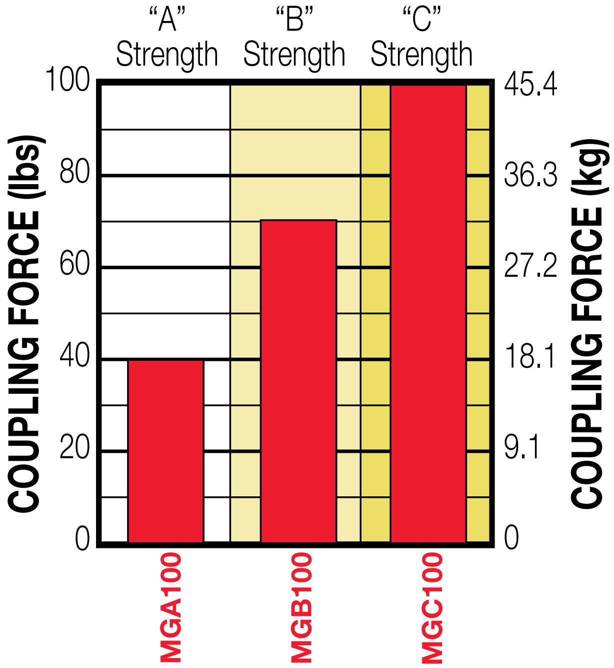

TUBE DEFLECTION

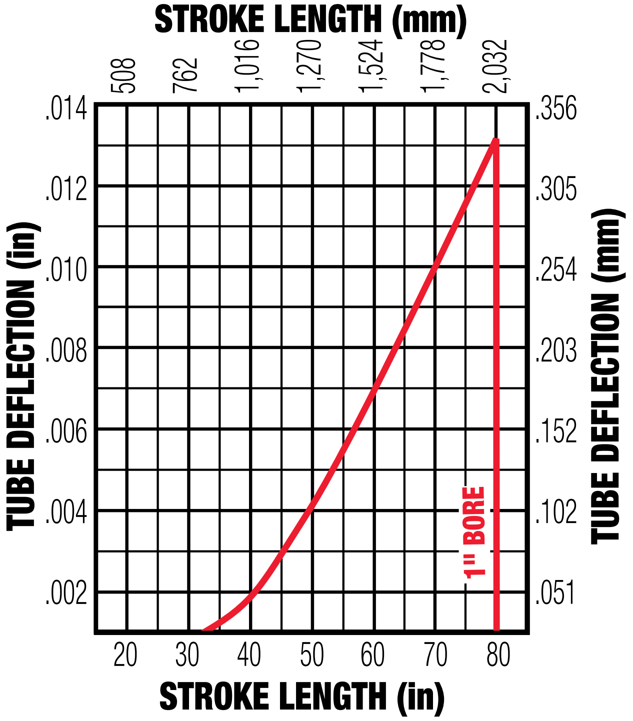

NOTES REGARDING MAGNETIC COUPLING

1) De-coupling will occur if coupling force is exceeded.

2) All coupling forces listed are for horizontal applications. For vertical applications, Tolomatic recommends using a 2-to-1 coupling force safety factor.

MG Magnetically Coupled Cylinder - All Sizes

SPECIFICATIONS

MGA, MGB, MGC BENDING MOMENT, WEIGHT, ETC.

MAGNET CODE	SIZE	BORE SIZE		BASE WEIGHT		WEIGHT/UNIT		MAX. STROKE		MAX. BENDING MOMENT My		MAX. PRESSURE		TEMPERATURE RANGE	
		in	*mm*	lbs	*kg*	lbs/in	*kg/mm*	in	*mm*	in-lbs	*N-m*	PSI	*bar*	°F	*°C*
A	100	1.000	*25*	1.52	*0.69*	0.04	*0.00071*	80.00	*2032.0*	35.00	*3.954*	100	*6.895*	20° to 140°	*-7° to 60°*
B				1.55	*0.70*										
C				1.79	*0.81*										

***For longer strokes, alternate materials, mounting and/or fasteners – consult Tolomatic**

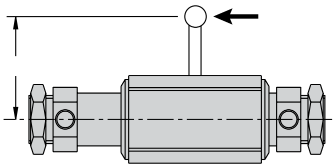

DIMENSIONS

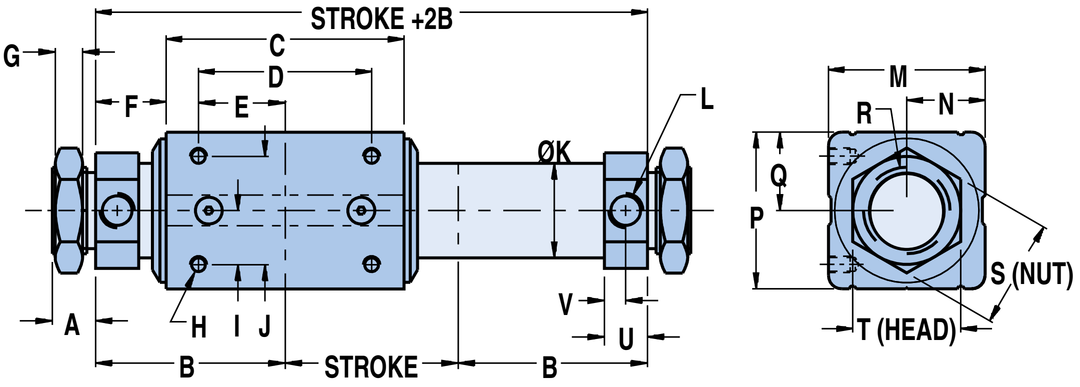

BORE	F	G	H	I	J	K	L	M	N	P	Q	R	S	T	U	V
100	1.000	0.81	0.32	#10-32UNC x .25	0.62	1.25	Ø1.09	1/8 NPT	1.81	0.91	1.81	0.91	1-12UNF	1.25	1.25	0.50	0.25

Dimensions in inches

	BORE	A	B	B*	C	C*	D	E
100	1.000	0.50	2.19	2.40	2.75	3.17	2.00	1.00

Dimensions in inches

***For "C strength" configurations only.**

	BORE	A	B	B*	C	C*	D	E
100	*25*	*12.7*	*55.6*	*61.0*	*69.9*	*80.5*	*50.8*	*25.4*

Dimensions in millimeters

	BORE	F	G	H	I	J	K	L	M	N	P	Q	R	S	T	U	V
100	*25*	*20.6*	*8.1*	#10-32UNC x .25	*15.7*	*31.8*	*27.7*	1/8 NPT	*46.0*	*23.1*	*46.0*	*23.1*	1-12UNF	*31.8*	*31.8*	*12.7*	*6.4*

Dimensions in millimeters

ABT
MXP
BC2
BC3
BC4
LS
MG
CC
PB
ENGR

MGS Magnetically Coupled Slide - All Sizes

PERFORMANCE

ABT
MXP
BC2
BC3
BC4
LS
MG
CC
PB
ENGR

MGS

ORDER CODE

MGS100
inch (U.S. Standard)

MGS OPTIONS	Page
Proximity Sensor	MG_12
Shock Absorber	MG_13
Switches	MG_10
MORE INFORMATION	**Page**
Application Guidelines	MG_18
Ordering	MG_20
Selection	MG_17

THEORETICAL FORCE vs PRESSURE

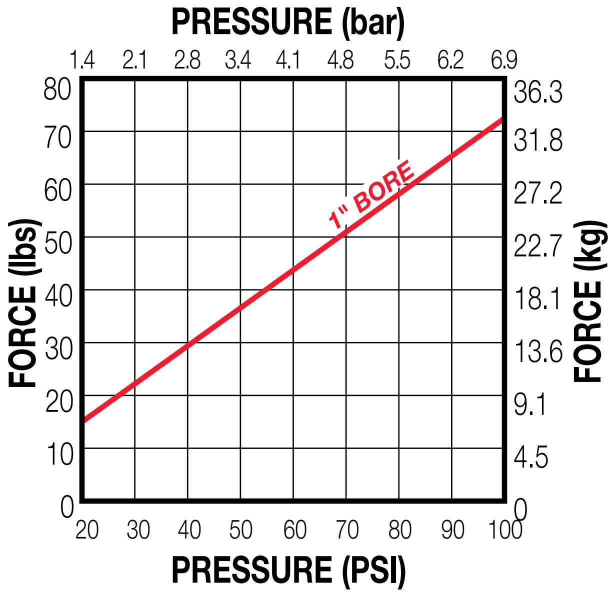

MAGNETIC COUPLING STRENGTH

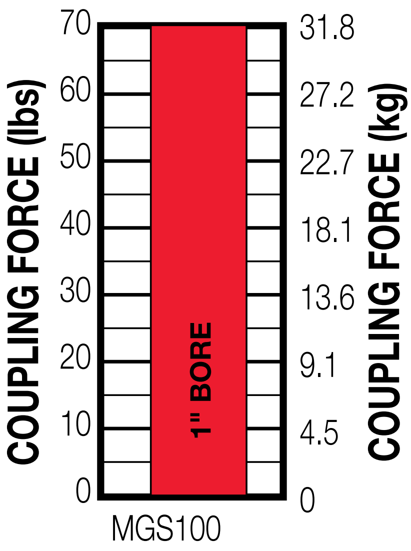

NOTES REGARDING MAGNETIC COUPLING

1) De-coupling will occur if coupling force is exceeded.

2) All coupling forces listed are for horizontal applications. For vertical applications, Tolomatic recommends using a 2-to-1 coupling force safety factor.

LOAD vs STROKE

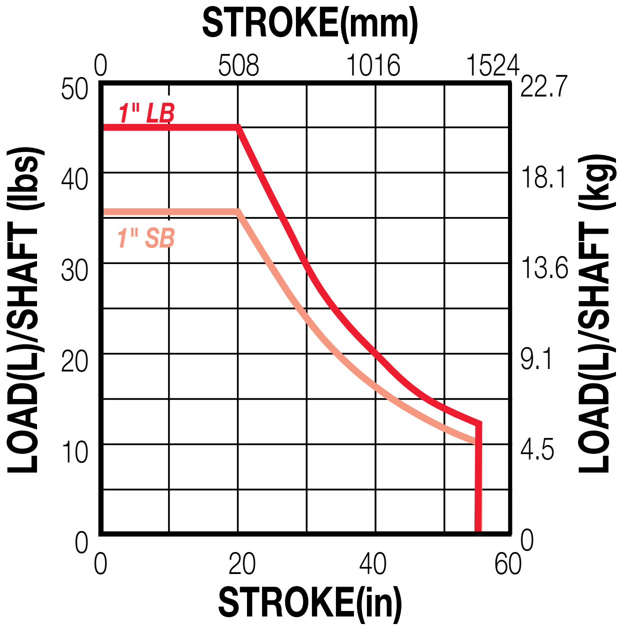

SB = Sintered Bronze Bearings
LB = Linear Ball Bearings

Also see formulae on page MG_12

MGS Magnetically Coupled Slide - All Sizes

SPECIFICATIONS

SIZE	BORE SIZE		BASE WEIGHT		WEIGHT/UNIT		MAX. STROKE		MAX. PRESSURE		TEMPERATURE RANGE	
	in	*mm*	lbs	*kg*	lbs/in	*kg/mm*	in	*mm*	PSI	*bar*	°F	*°C*
100	1.000	*25*	4.89	*2.22*	0.180	*0.003214*	55.00	*1397.0*	100	*6.895*	20° to 140°	*-7° to 60°*

*For longer strokes, alternate materials, mounting and/or fasteners – consult Tolomatic

DIMENSIONS

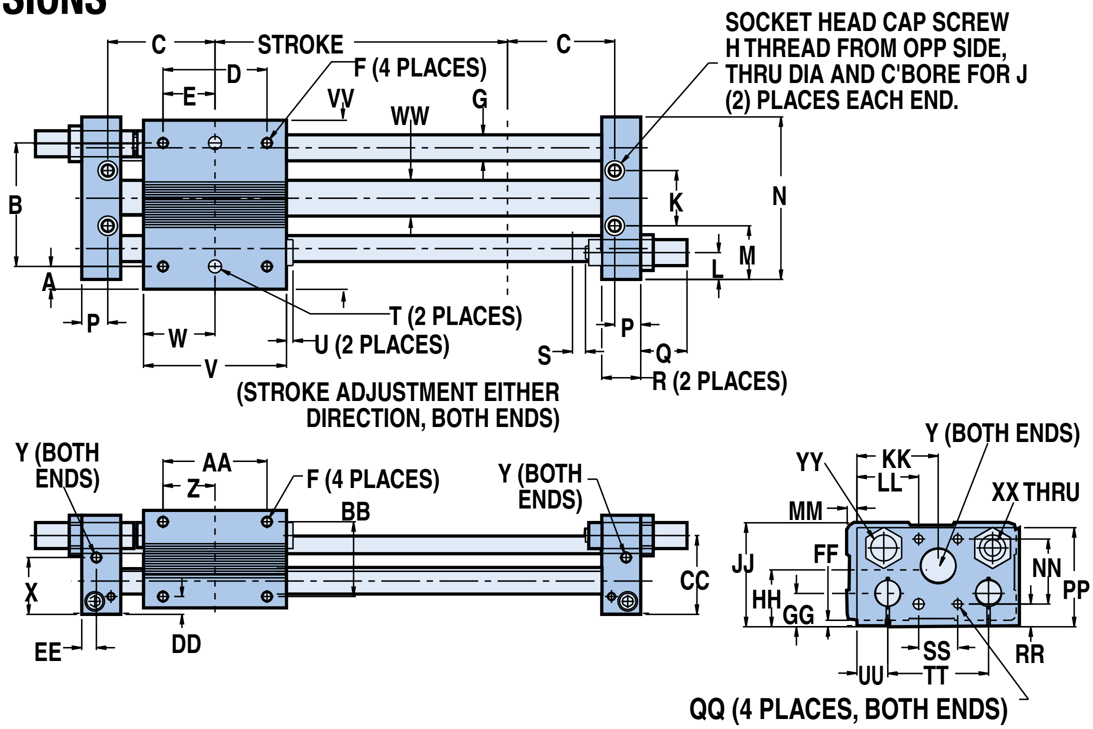

Model	Bore	A	B*	C	D	E	F	G	H	J	K	L	M	N	P	Q	R	S	T	U	V	W
MGS100	1.000	0.42	3.250	2.28	2.50	1.25	10-24 x .38 DP	0.63	1/4-20 x .50 DP	#10	1.63	0.63	1.22	4.06	0.53	1.14 max.	0.75	0.25	.2495/.2500 x .20 DP	0.13	3.25	1.63

Model	X	Y	Z	AA	BB	CC	DD	EE	FF	GG	HH	JJ	KK	LL	MM	NN	PP	QQ	RR	SS	TT	UU	VV	WW	XX	YY
MGS100	1.31	1/8-27 Port	1.00	2.00	1.69	1.75	0.34	0.28	0.13	0.81	1.31	2.34	2.08	1.47	0.09	1.13	2.22	10-24x.38 DP	0.75	1.13	2.63	0.72	4.09	1.09	M8-1	9/16-18 Thru.Ø.688x.31DP

**Tolerance between dowel pins is ±.001"*

Above dimensions in inches

Model	Bore	A	B*	C	D	E	F	G	H	J	K	L	M	N	P	Q	R	S	T	U	V	W
MGS100	25.4	10.7	82.6	57.9	63.5	31.8	10-24 x .38 DP	16.0	1/4-20 x .50 DP	#10	41.4	16.0	31.0	103.1	13.5	29.0 max.	19.1	6.4	.2495/.2500 x .20 DP	3.3	82.6	41.4

Model	X	Y	Z	AA	BB	CC	DD	EE	FF	GG	HH	JJ	KK	LL	MM	NN	PP	QQ	RR	SS	TT	UU	VV	WW	XX	YY
MGS100	33.3	1/8-27 Port	25.4	50.8	42.9	44.5	8.6	7.1	3.3	20.6	33.3	59.4	52.8	37.3	2.3	28.7	56.4	10-24x.38 DP	19.1	28.7	66.8	18.3	103.9	27.7	M8-1	9/16-18 Thru.Ø.688x.31DP

**Tolerance between dowel pins is ±.025mm*

Above dimensions in millimeters

MG Foot Mount - All Sizes

Foot Mount

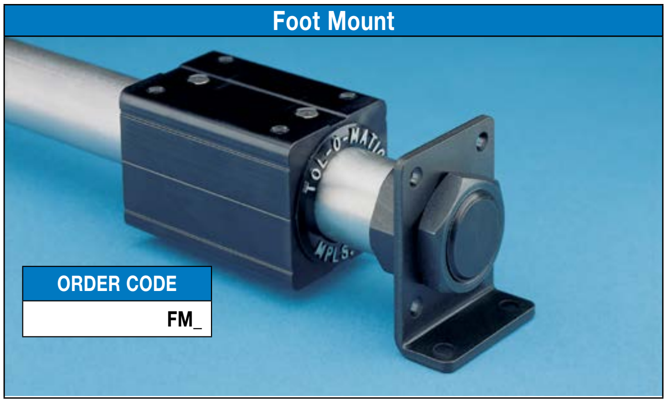

ORDER CODE
FM_

Foot mounts are an excellent mounting alternative. Made from plated stamped steel, foot mounts are attached to cylinder heads as shown in the dimension drawing, below. Foot mounts may be ordered for one or both ends of the cylinder. Foot mounts can then be attached to almost any surface at a 90° angle to provide solid support without affecting stroke.

DIMENSIONS

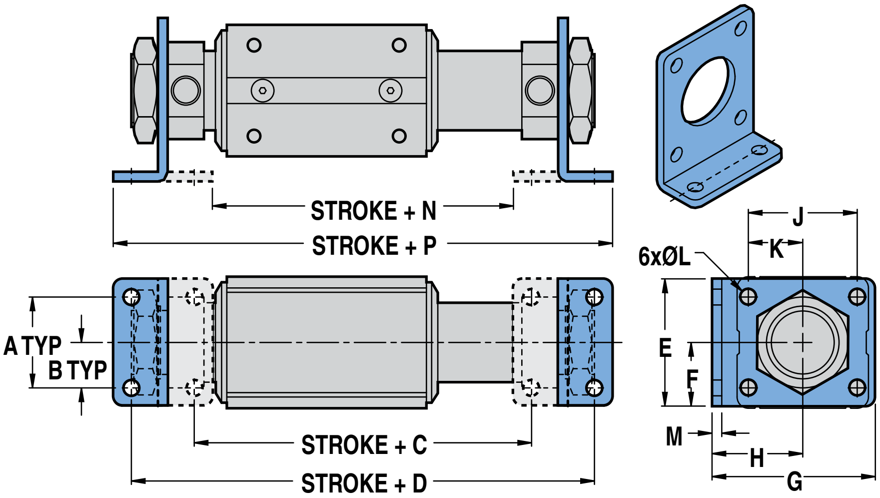

	BORE	A	B	C	C*	D	D*	E	F	G	H	J	K	L	M	N	N*	P	P*
100	1.000	1.25	0.63	3.65	4.07	5.38	5.80	1.75	0.88	2.25	1.25	1.50	0.75	Ø.22	0.13	3.15	3.58	5.88	6.31

***For "C strength" configurations only.**

Dimensions in inches

	BORE	A	B	C	C*	D	D*	E	F	G	H	J	K	L	M	N	N*	P	P*
100	*25*	*31.8*	*16.0*	*92.7*	*103.4*	*136.7*	*147.3*	*44.5*	*22.4*	*57.2*	*31.8*	*38.1*	*19.1*	*5.6*	*3.3*	*80.0*	*90.9*	*149.4*	*160.3*

Dimensions in millimeters

SIZE	BORE SIZE		WEIGHT	
	in	*mm*	lbs	*kg*
100	1.000	*25*	0.28	*0.127*

MG Floating Mount Bracket - All Sizes

ABT
MXP
BC2
BC3
BC4
LS
MG
CC
PB
ENGR

Floating Mount Bracket

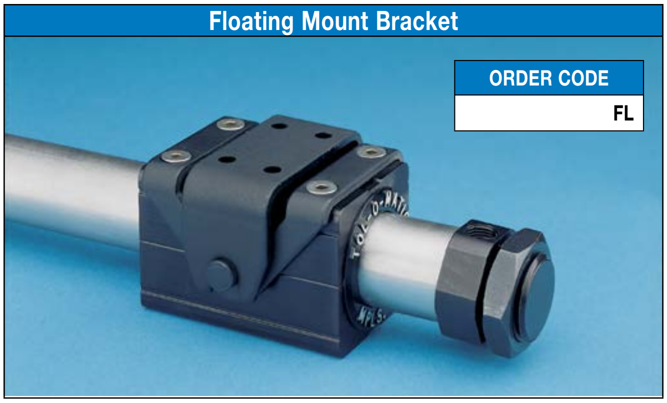

ORDER CODE
FL

The integral floating mount bracket is available for applications in which a load is externally guided and supported and there is a need to compensate for non-parallelism between the cylinder and the independently-guided load.

Loads which are not parallel to the cylinder may result in the cylinder binding if the floating mount bracket is not used. Also, use of the floating mount is highly recommended to provide easier set-up of guide/support system and to help increase actuator block bearing life.

DIMENSIONS

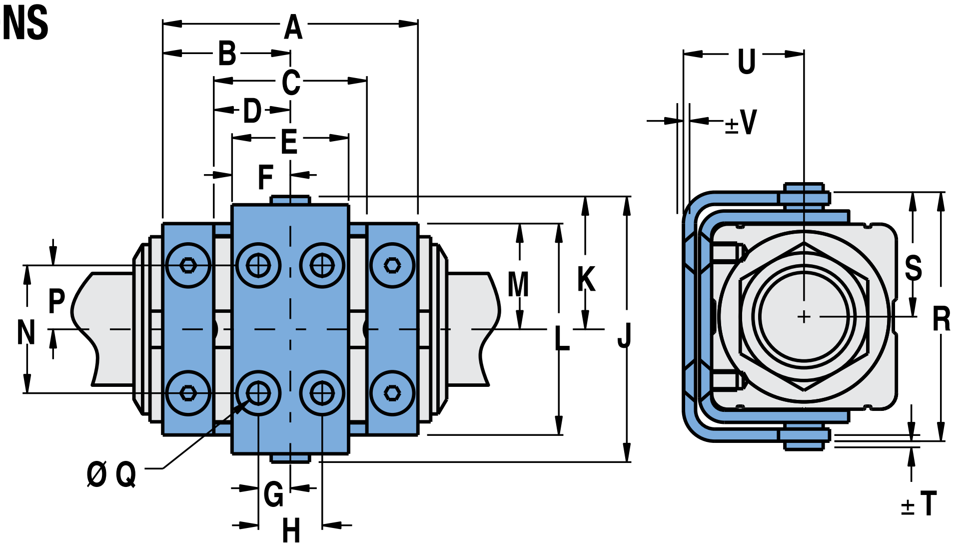

	BORE	A	B	C	D	E	F	G	H	J	K	L	M	N	P	Q	R	S	T	U	V
100	1.000	2.50	1.25	1.50	0.75	1.14	0.57	0.31	0.62	2.60	1.30	2.07	1.03	1.25	0.63	Ø.248	2.44	1.22	0.06	1.20	0.08

Dimensions in inches

	BORE	A	B	C	D	E	F	G	H	J	K	L	M	N	P	Q	R	S	T	U	V
100	*25.4*	*63.5*	*31.8*	*38.1*	*19.1*	*29.0*	*14.5*	*7.9*	*15.7*	*66.0*	*33.0*	*52.6*	*26.2*	*31.8*	*16.0*	*6.3*	*62.0*	*31.0*	*1.5*	*30.5*	*2.0*

Dimensions in millimeters

	BORE SIZE		WEIGHT	
SIZE	**in**	*mm*	**lbs**	*kg*
100	1.000	*25*	0.33	*0.150*

MG & MGS Switches - All Sizes

SWITCHES

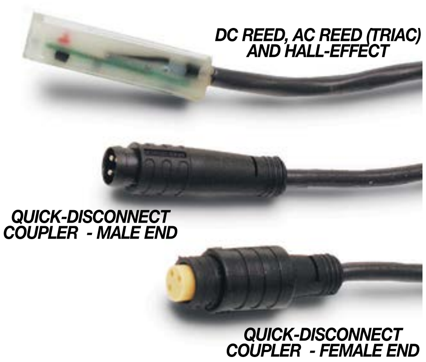

There are 10 sensing choices: DC reed, form A (open) or form C (open or closed); AC reed (Triac, open); Hall-effect, sourcing, PNP (open); Hall-effect, sinking, NPN (open); each with either flying leads or QD (quick disconnect). Commonly used to send analog signals to PLC (programmable logic controllers), TLL, CMOS circuit or other controller device. These switches are activated by the actuator's magnet.

Switches contain reverse polarity protection. QD cables are shielded; shield should be terminated at flying lead end.

If necessary to remove factory installed switches, be sure to reinstall on the same of side of actuator with scored face of switch toward internal magnet.

SPECIFICATIONS

	REED DC				REED AC		HALL-EFFECT DC			
ORDER CODE	RT	RM	BT	BM	CT	CM	TT	TM	KT	KM
LEAD	5m	QD*	5m	QD*	5m	QD*	5m	QD*	5m	QD*
CABLE SHIELDING	Unshielded	Shielded†	Unshielded	Shielded†	Unshielded	Shielded†	Unshielded	Shielded†	Unshielded	Shielded†
SWITCHING LOGIC	"A" Normally Open		"C" Normally Open or Closed		Triac Normally Open		PNP (Sourcing) Normally Open		NPN (Sinking) Normally Open	
MECHANICAL CONTACTS	Single-Pole Single-Throw		Single-Pole Double-Throw		Single-Pole Single-Throw		NO, These Are Solid State Components			
COIL DIRECT	Yes		Yes		Yes		—			
POWER LED	None		None		None		None		None	
SIGNAL LED	Red						Red		Red	
OPERATING VOLTAGE	200 Vdc max.		120 Vdc max.		120 Vac max.		5 - 25 Vdc			
OUTPUT RATING	—				—		25 Vdc, 200mA dc			
OPERATING TIME	0.6 msec max. (including bounce)		0.7 msec max. (including bounce)		—		< 10 micro sec.			
OPERATING TEMPERATURE	-40°F [-40°C] to 158°F [70°C]						0°F [-18°C] to 150°F [66°C]			
RELEASE TIME	1.0 msec. max.				—		—			
ON TRIP POINT	—				—		150 Gauss maximum			
OFF TRIP POINT	—				—		40 Gauss minimum			
**POWER RATING (WATTS)	10.0 §		3.0 §§		10.0		5.0			
VOLTAGE DROP	2.6 V typical at 100 mA		NA		—		—			
RESISTANCE	0.1 Ω Initial (Max.)				—		—			
CURRENT CONSUMPTION	—				1 Amp at 86°F [30°C]	0.5 Amp at 140°F [60°C]	200 mA at 25 Vdc			
FREQUENCY	—				47 - 63 Hz		—			
CABLE MIN. BEND RADIUS STATIC	0.630" *[16mm]*									
DYNAMIC	Not Recommended									

CAUTION: DO NOT OVER TIGHTEN SWITCH HARDWARE WHEN INSTALLING!

** **WARNING**: Do not exceed power rating (Watt = Voltage X Amperage). Permanent damage to sensor will occur.

*QD = Quick Disconnect; Male coupler is located 6" [152mm] from sensor,
Female coupler to flying lead distance is 197" [5m] also see Cable Shielding specification above

REPLACEMENT OF QD SWITCHES MANUFACTURED BEFORE JULY 1, 1997: It will be necessary to replace or rewire the female end coupler.

CURRENT
Quick disconnect
Wiring

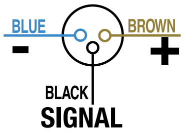

OLD
Quick disconnect
Wiring

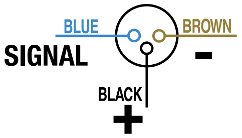

Reed Switch Life Expectancy: Up to 200,000,000 cycles (depending on load current, duty cycle and environmental conditions)

† Shielded from the female quick disconnect coupler to the flying leads. Shield should be terminated at flying lead end.

§ Maximum current 500mA (not to exceed 10VA) Refer to Temperature vs. Current graph and Voltage Derating graph

§§ Maximum current 250mA (not to exceed 3VA) Refer to Temperature vs. Current graph and Voltage Derating graph

MG & MGS Switches - All Sizes

PERFORMANCE

TEMP. vs CURRENT, DC REED

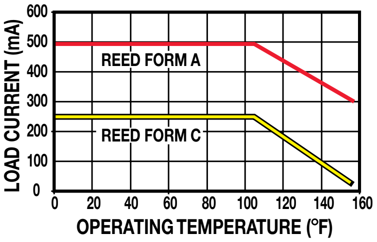

TEMP. vs CURRENT, AC REED

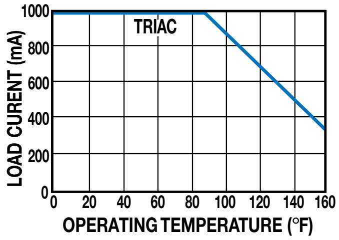

VOLTAGE DERATING, DC REED

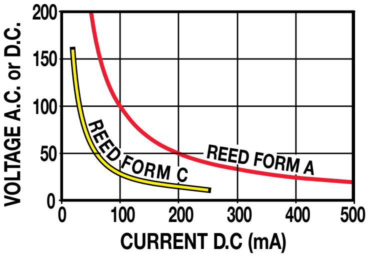

WIRING DIAGRAMS

RT & RM DC REED, FORM A

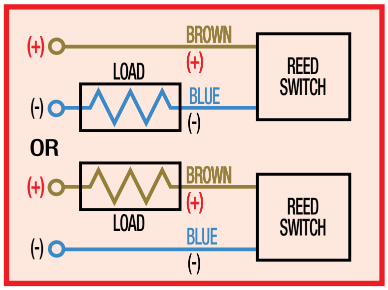

CT & CM AC REED, TRIAC

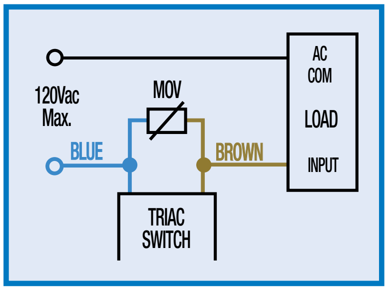

BT & BM DC REED, FORM C

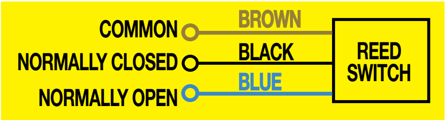

TT & TM HALL-EFFECT, SOURCING, PNP

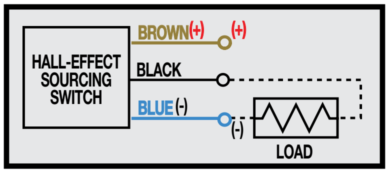

KT & KM HALL-EFFECT, SINKING, NPN

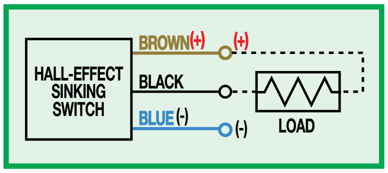

INSTALLATION INFORMATION

⚠ THE NOTCHED FACE OF THE SWITCH INDICATES THE SENSING SURFACE AND MUST FACE TOWARD THE MAGNET.

MG Magnetically Coupled Cylinder

DIMENSIONS

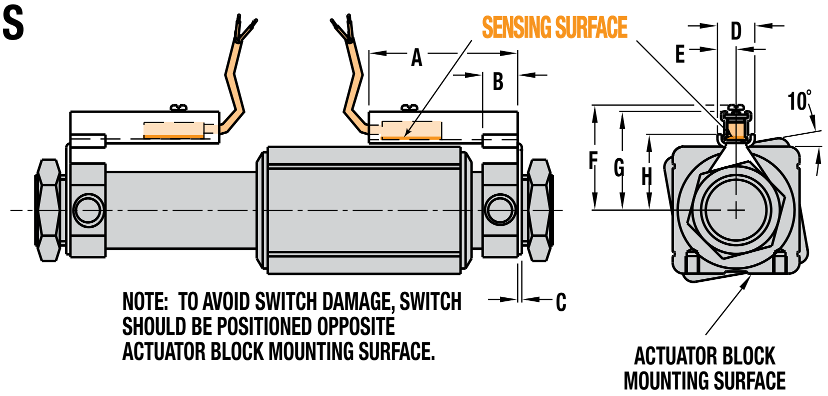

NOTE: TO AVOID SWITCH DAMAGE, SWITCH SHOULD BE POSITIONED OPPOSITE ACTUATOR BLOCK MOUNTING SURFACE.

	BORE	A	B	C	D	E	F	G	H
100	1.000	2.12	0.50	0.06	0.53	0.27	1.48	1.45	1.08

Dimensions in inches

	BORE	A	B	C	D	E	F	G	H
100	25.4	53.85	12.70	1.52	13.46	6.86	37.59	36.83	27.43

Dimensions in millimeters

MGS Switches - All Sizes

MGS Magnetically Coupled Slide

DIMENSIONS

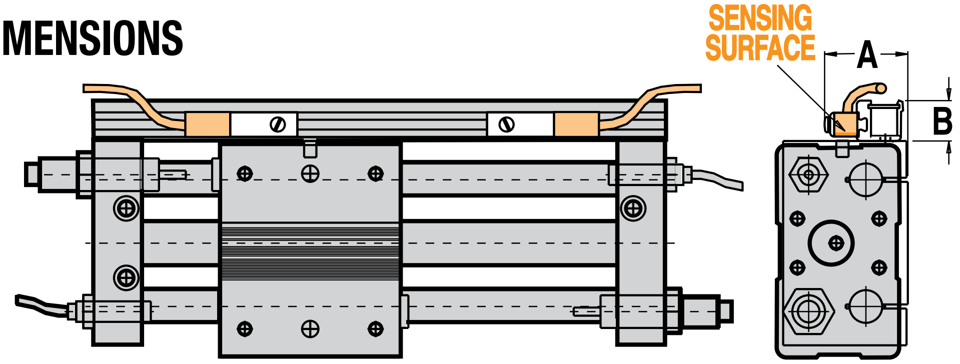

BORE		A	B
100	1.000	1.47	0.47

Dimensions in inches

BORE		A	B
100	*25.4*	*37.34*	*11.94*

Dimensions in millimeters

MGS Proximity Sensor

Proximity Sensor

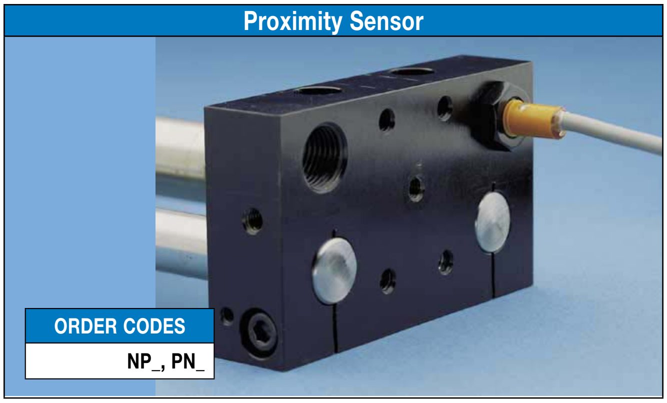

ORDER CODES

NP_, PN_

This L.E.D. device senses end-of-stroke with one of two normally open inductive d.c. proximity sensors. NPN supplies a sinking signal; PNP supplies a sourcing signal to a device such as a programmable logic controller.

Ambient Temp.: -13° to 158° F., (-25° to 70° C.)

NEMA Encl. Rating: 1, 3, 4, 6, 12, 13

Lead Length: 6.56 feet (2.0 m)

Max. Sensing Distance: 0.016" (0.4 mm)

Wiring Diagrams

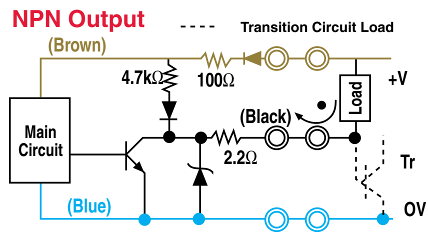

200mA Max. (Sink Current), 2V Max. (Residual Voltage)

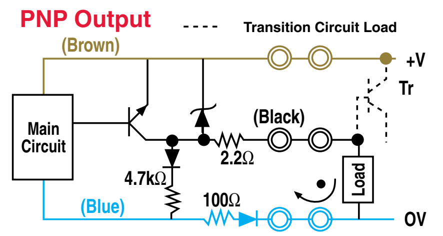

200mA Max. (Source Current), 2V Max. (Residual Voltage)

NPN Output

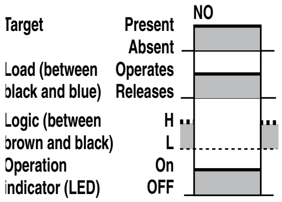

Short-Circuit Indication
The load output immediately turns off and remains off until the short-circuit protection is reset.

PNP Output

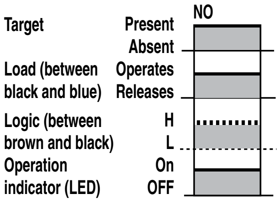

Resetting Short-Circuit Protection
To reset the short-circuit protection, repair the short. The short-circuit protection will then automatically reset.

DIMENSIONS

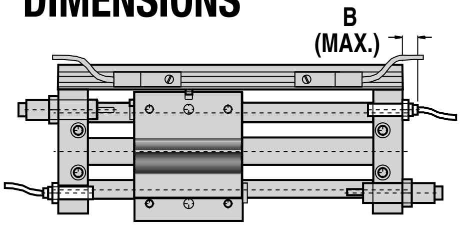

SIZE	BORE		B		WEIGHT	
	in	*mm*	in	*mm*	lbs	*kg*
100	1.000	*25*	0.52	*13.2*	0.25	*0.113*

MGS Shock Absorbers - All Sizes

SHOCK ABSORBERS

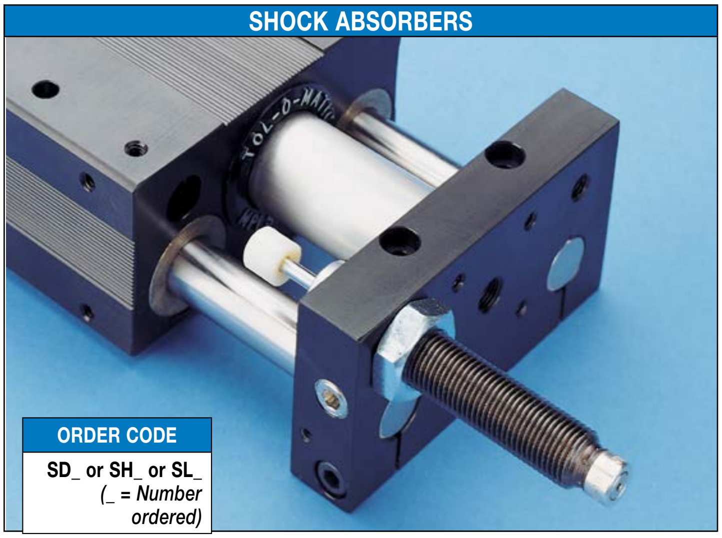

ORDER CODE

SD_ or SH_ or SL_
(_ = Number ordered)

Magnetically coupled slides with standard internal bumpers offer an effective method of decelerating loads. However, magnetically coupled slides are capable of carrying heavier loads at higher velocities than the internal bumpers can absorb. Optional shock absorbers can be used to increase the unit's life and broaden the application range for the magnetically coupled slide you have chosen.

Typical shock absorber life varies between 1-2 million cycles (depending on environment). Appropriate preventative maintenance should be considered in high cyclic applications.

⚠ CAUTION: In applications which result in a load bending moment at deceleration, care should be taken to decelerate the load rather than the carrier of the magnetically coupled slide.

DIMENSIONS

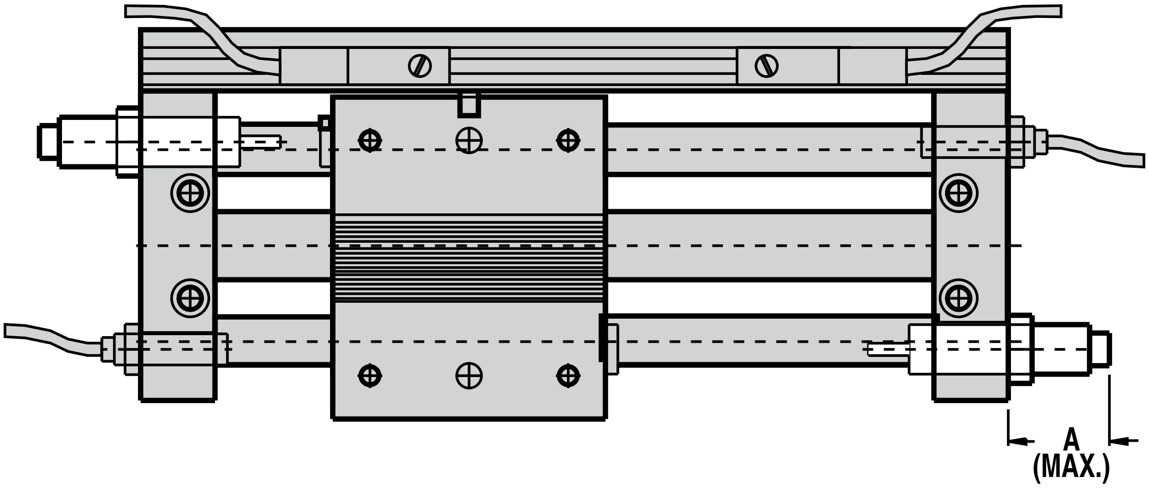

SIZE	BORE		A		WEIGHT	
	in	*mm*	in	*mm*	lbs	*kg*
100	1.000	*25*	2.63	*66.8*	0.04	*0.018*

MGS Shock Absorbers - All Sizes - PERFORMANCE

VELOCITY vs LOAD

MGS100

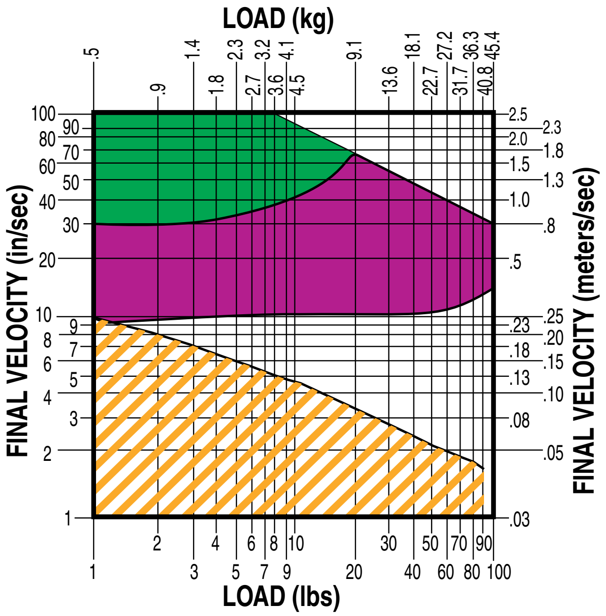

🟩 LIGHT DUTY (Light load/High velocity)

🟪 HEAVY DUTY (Heavy load/Low velocity)

▨ Bumpers

NOTE: If final (or impact) velocity cannot be calculated directly, a reasonable guideline to use is 2 x average velocity.

Application Data Worksheet

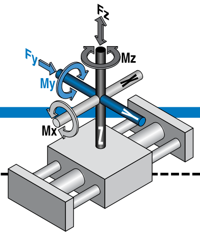

STROKE LENGTH ______________
☐ inch (SK) (U.S. Standard) ☐ millimeters (Metric)

AVAILABLE AIR PRESSURE ______
☐ PSI (U.S. Standard) ☐ bar (Metric)

REQUIRED THRUST FORCE ______
☐ lbf (U.S. Standard) ☐ N (Metric)

LOAD ______________________
☐ lb (U.S. Standard) ☐ kg (Metric)

LOAD CENTER OF GRAVITY DISTANCE TO CARRIER CENTER
d_x _______
d_y _______
d_z _______
☐ inch (U.S. Standard) ☐ millimeters (Metric)

FORCES APPLIED TO CARRIER
F_z _______
F_y _______
☐ lbf (U.S. Standard) ☐ N (Metric)

BENDING MOMENTS APPLIED TO CARRIER
M_x _______
M_y _______
M_z _______
☐ in-lbs (U.S. Standard) ☐ N-m (Metric)

FINAL VELOCITY ______________
☐ in/sec (U.S. Standard) ☐ mm/sec (Metric)

MOVE TIME sec. ______________

NO. OF CYCLES ______________
☐ per minute ☐ per hour

ORIENTATION

☐ Horizontal

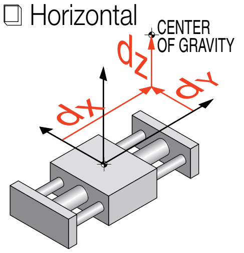

☐ Side

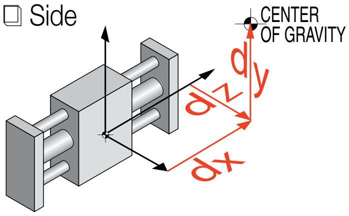

☐ Horizontal Down

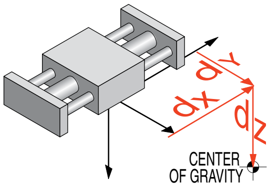

☐ Vertical

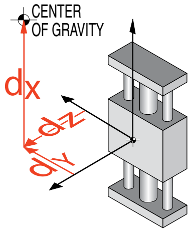

☐ Angled α ______

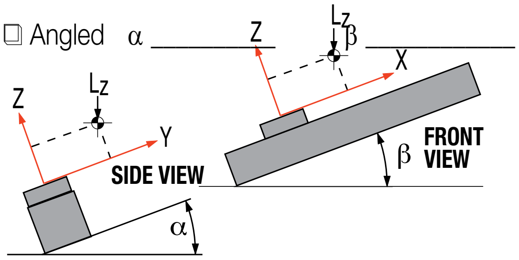

OTHER ISSUES:
(i.e. Environment, Temperature, Contamination, etc.)
____
____
____
____

Contact information: ______________________________
____
____
____

Fax (1-763-478-8080) or call Tolomatic (1-800-328-2174) with the above information.
We will provide any assistance needed to determine the proper actuator.

MG: Mag Coupled Cylinder Selection Guidelines - All Sizes

EXTERNAL LOAD GUIDANCE AND SUPPORT

The process of selecting a magnetically coupled cylinder for a given application can be complex. It is highly recommended that you contact Tolomatic or a Tolomatic Distributor for assistance in selecting the best actuator for your application. The following overview of the selection guidelines are for educational purposes only.

1 COMPILE APPLICATION REQUIREMENTS

To determine the appropriate Magnetically Coupled Cylinder model for an application, compile the following information:

- Available pressure (PSI)
- Weight of load (lbs. or kgs.)
- Orientation of load (lbs. or kgs.)
- Velocity of load (in./sec. or mm/sec.)
- Stroke length (in. or mm)

2 SELECT CYLINDER SIZE

- Consult the Theoretical Force vs. Pressure charts.
- Cross-reference the load force (or load weight if force is not known) and the available operating pressure. If the intersection falls below the diagonal line, and if moments do not exceed maximum values listed for that model (see Step 3), the actuator will accommodate the application. If the intersection is above the diagonal line, a larger cylinder bore size should be considered.

NOTE: Additional force may be required to obtain the necessary acceleration for vertical or horizontal loads.

3 DETERMINE COUPLING FORCE REQUIREMENTS

Use the following formula:

$F = .013 \text{ x Weight x Velocity}^2$

Calculated value must be less than the Magnetic Coupling Strength values. (page MG_4)

4 DETERMINE INTERNAL CUSHION CAPACITY

- Consult the Cushion Data chart for the model selected. The velocities listed on the cushion charts are final or cushion impact velocities. On applications where the internal cushions or bumpers are to be used, be sure the actual, final or impact velocity is known. If the velocity is not known, use of limit switches with valve deceleration circuits or shock absorbers should be considered.

Cross-reference the final velocity and weight of the load. If the intersection is below the diagonal lines, the internal cushions on the actuator may be used. If the point falls above the dashed diagonal line or if the velocity is not known, use deceleration circuits, external shock absorbers or select a larger cylinder with greater cushion capacity. On high-cyclic applications, use of external stops is strongly recommended.

NOTE: Magnetically coupled cylinders do not have internal cushions. Heavier loads require external stops or shock absorbers.

MGS: Mag Coupled Slide Selection Guidelines - All Sizes

PROVIDING LOAD GUIDANCE AND SUPPORT

1 COMPILE APPLICATION REQUIREMENTS

To determine the appropriate Magnetically Coupled Slide for an application, compile the following information:

- Available pressure (PSI)
- Weight of load (lbs. or kgs.)
- Orientation of load (lbs. or kgs.)
- Velocity of load (in./sec. or mm/sec.)
- Stroke length (in. or mm)

2 SELECT CYLINDER SIZE

- Consult the Theoretical Force vs. Pressure charts.
- Cross-reference the load force (or load weight if force is not known) and the available operating pressure. If the intersection falls below the diagonal line, and if moments do not exceed maximum values listed for that model (see Step 3), the actuator will accommodate the application. If the intersection is above the diagonal line, a larger cylinder bore size should be considered.

NOTE: Additional force may be required to obtain the necessary acceleration for vertical or horizontal loads.

3 KEEP UNDER MAXIMUM STROKE LENGTH

There are specific maximum stroke lengths for each model. MGS100: 55.00”

4 DETERMINE NATURE OF LOAD AND THE EFFECT OF BENDING MOMENTS

If the actuator will guide and support a load located directly over the center of carrier, bending moments will not be a factor in the actuator selection. Magnetically Coupled Slides perform best that way. See the Bending Moments Formulae below if your application requires the load to be away from center of the carrier.

5 DETERMINE THE BEARING ROD LOAD CAPACITY

Determine whether the Load Weight and Stroke Length will be within the load capacity for the bearing rods.

Cross reference the load weight and stroke on the Load Weight vs. Stroke chart for the selected bore size. (Page MG_6) If the intersection falls below the curve, the cylinder will accommodate the application requirements. If the intersection falls outside the curve, consult the chart of a larger bore size that will accommodate the required load weight and stroke for your application.

The weight on the bearing rods causes them to bend or deflect slightly over their length. This deflection is increased for longer rods and/or higher weights on the bearing block. For proper operation, rod deflection must not exceed .30".

6 DETERMINE COUPLING FORCE REQUIRED

- Consult the Mag Coupling Strength chart (page MG_6). If the load value is less than the coupling force for the chosen actuator, it may be used for the application. If the load value is greater than the coupling force for the chosen actuator, select a larger actuator.

7 DETERMINE INTERNAL BUMPER CAPACITY

- Consult the Cushion Data chart (Bumper Data for Magnetically Coupled Slides page MG_14) for the model selected. The velocities listed on the cushion charts are final or cushion impact velocities. On applications where internal bumpers are to be used, be sure the actual, final or impact velocity is known. If the velocity is not known, use of limit switches with valve deceleration circuits or shock absorbers should be considered.

BENDING MOMENTS

Loading Equation Data

MODEL	BORE SIZE	A (in.)	D (in.)	F (lbs.)	G (lbs.)
MGS100	1"	2.62	2.00	90.00	72.00

*(See **MGS Load vs Stroke** graph on page MG_6)*

“L” MOMENT

$$L = \frac{W}{2}$$

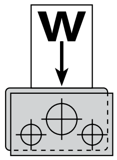

“Mx” MOMENT

$$L = \frac{WB}{A}$$

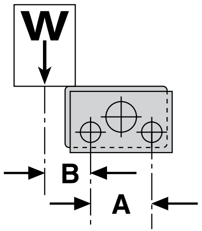

“My” / “Mz” MOMENT

$$F \text{ or } G = 2L = \frac{WB}{D}$$

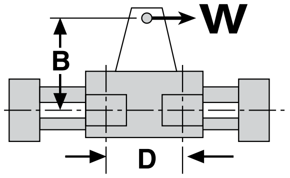

L should be below curve for the corresponding slide on the “Load vs. Stroke” chart (for sintered bronze or linear bearings - Mag Coupled Slides).

Loading Equation Key

A = Distance between shaft centers

B = Distance from load center to center of nearest shaft (in.); determined by application

L = Load per shaft (lbs.)

W = Payload weight (lbs.)

D = Axial distance between center of bearings (in.)

F = Max. bearing sliding load (linear bearings) (lbs.)

G = Max. bearing sliding load (sintered bronze bearings) (lbs.)

Application Guidelines

The following conditional statements are intended as general guidelines for use of Tolomatic actuators. Since all applications have their own specific operating requirements, consult Tolomatic, Inc. or your local Tolomatic distributor if an application is unconventional or if questions arise regarding the selection process.

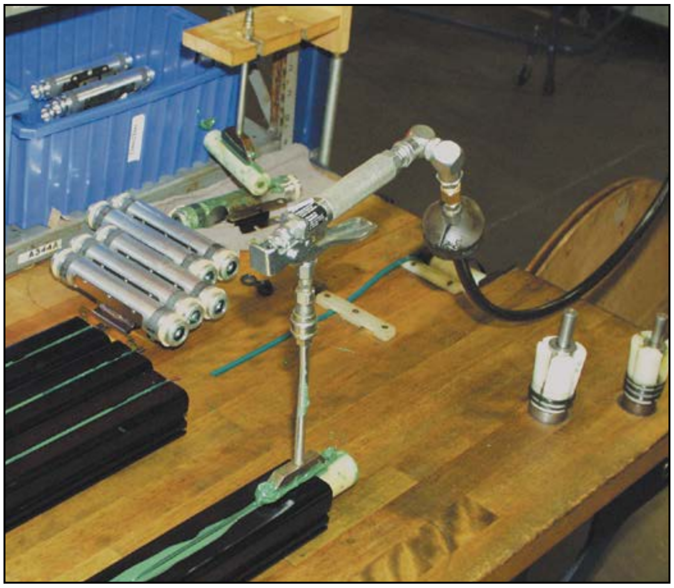

LUBRICATION GUIDELINES

All Tolomatic actuators (except Cable Cylinders) are prelubricated at the factory. To ensure maximum actuator life, the following guidelines should be followed.

- **Filtration**

  We recommend the use of dry, filtered air in our products. "Filtered air" means a level of 10 Micron or less. "Dry" means air should be free of appreciable amounts of moisture. Regular maintenance of installed filters will generally keep excess moisture in check.

- **External Lubricators (optional)**

  The factory prelubrication of Tolomatic actuators will provide optimal performance without the use of external lubrication. However, external lubricators can further extend service life of pneumatic actuators if the supply is kept constant.

  Oil lubricators, (mist or drop) should supply a minimum of 1 drop per 20 standard cubic feet per minute to the cylinder. As a rule of thumb, double that rate if water in the system is suspected. Demanding conditions may require more lubricant.

  If lubricators are used, we recommend a non-detergent, 20cP @ 140°F 10-weight lubricant. Optimum conditions for standard cylinder operation are +32° to +150°F (+0° to 65.5°C).

  NOTE: Use of external lubricators may wash away the factory installed lubrication. External lubricants must be maintained in a constant supply or the results will be a dry actuator prone to premature wear.

- **Sanitary Environments**

  Oil mist lubricators must dispense "Food Grade" lubricants to the air supply. Use fluids with ORAL LD50 toxicity ratings of 35 or higher such as Multitherm® PG-1 or equivalent. Demanding conditions can require a review of the application.

FINAL VELOCITY CALCULATION

Velocity calculations for all rodless cylinders need to differentiate between final velocity and average velocity. For example: Stroking a 100-inch BC3 model in one second yields an average velocity of 100 inches per second. To properly determine the inertial forces for cushioning, it is important to know the final (or impact) velocity. Rodless cylinders accelerate and decelerate at each end of the stroke. Therefore this acceleration must be considered (see diagram).

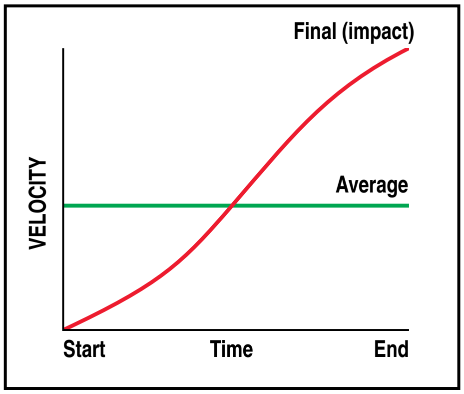

If final (or impact) velocity cannot be calculated directly, a reasonable guideline is to use 2 x average velocity.

MG Ordering - ALL Sizes

MODEL, BORE, STROKE **OPTIONS**

MGC 100 SK58.250 FM2 FL BM2

MODEL & MAG COUPLING

MGA	Low coupling strength mag coupled cylinder
MGB	Medium coupling strength mag coupled cylinder
MGC	High coupling strength mag coupled cylinder

BORE SIZE

100	1.00" *(25mm)*

STROKE LENGTH

SK_ _._ _ Enter desired stroke length in decimal inches

MAXIMUM STROKE

SIZE	**MG_**	
	in	*mm*
100	80.00	*2,032.0*

FOOT MOUNT (MG_8)

FM_	Foot Mount & number required (1 or 2)

FLOATING MOUNT (MG_9)

FL	Floating Mount Bracket

SWITCHES (MG_10)

TYPE		**QUICK-DISCONNECT**	**CODE**	**QUANTITY**	**LEAD LENGTH**
REED	Form A	QD	**RM**	After code enter quantity desired	5 meters
		no	**RT**		
	Form C	QD	**BM**		
		no	**BT**		
HALL-EFFECT	Sinking	QD	**KM**		
		no	**KT**		
	Sourcing	QD	**TM**		
		no	**TT**		
TRIAC		QD	**CM**		
		no	**CT**		

MG Service Parts Ordering - ALL Sizes

	CONFIG. CODE ORDERING **Mounting Hardware & FE conn. included**
DESCRIPTION	**CODE**
Switch Kit, Reed, Form C, 5m	BT
Switch Kit, Reed, Form C, Male Conn.	BM
Switch Kit, Reed, Form A, 5m	RT
Switch Kit, Reed, Form A, Male Conn.	RM
Switch Kit, Triac, 5m	CT
Switch Kit, Triac, Male Conn.	CM
Switch Kit, Hall-effect, Sinking, 5m	KT
Switch Kit, Hall-effect, Sinking, Male Conn.	KM
Switch Kit, Hall-effect, Sourcing, 5m	TT
Switch Kit, Hall-effect, Sourcing, Male Conn.	TM

NOTE: When kit is ordered female connector & all mounting hardware is included

SIZE	**100**	**025****	**038****	**062****
Floating Mount Kit	2410-9005	2402-9005	2403-9005	2406-9005
Foot Mount Kit[1]	2410-9011	2402-9011	2402-9011	2402-9011

**MG025, MG038, MG062 are discontinued, all parts listed are limited to stock on hand.

Service Parts Ordering NOTES:

1 Foot Mount Kit contains two (2) brackets.

_ **=** numeric entry required

Switch Ordering NOTES:

To order field retrofit switch and hardware kits for all Tolomatic actuators: SW (Then the model and bore size, and type of switch required) *(Hardware and Form A Reed switch with 5 meter lead for 0.625" bore Mag coupled cylinder)*

Switch ordering method*: SW MGC _ _ _ _ _

EXAMPLE: SW MGC 062 RK

Switch Kit — Model — Bore Size — Switch Code

*will include mating female QD cable if required

MGS Ordering - ALL Sizes

MODEL, BORE, STROKE | **OPTIONS**

MGS 100 SK28.250 LB SL2 BM2

MODEL

MGS Mag coupled slide

BORE SIZE

100 1.00" *(25mm)*

STROKE LENGTH

SK_ _._ _ Enter desired stroke length in decimal inches

SIZE	**MAXIMUM STROKE MG_** in	*mm*
100	55.00	*1,397.0*

BEARING SELECTION

SB Sintered Bronze Bearing
LB Linear Ball Bearings

PROXIMITY SENSOR (MG_12)

NP_ Sinking type proximity sensor (NPN)
PN_ Sourcing type proximity sensor (PNP)

SHOCK ABSORBERS (MG_13)

SL_ Light duty shock absorber
SH_ Heavy duty shock absorber

SWITCHES (MG_10)

TYPE		**QUICK-DISCONNECT**	**CODE**	**QUANTITY**	**LEAD LENGTH**
REED	Form A	QD	**RM**	After code enter quantity desired	5 meters
		no	**RT**		
	Form C	QD	**BM**		
		no	**BT**		
HALL-EFFECT	Sinking	QD	**KM**		
		no	**KT**		
	Sourcing	QD	**TM**		
		no	**TT**		
TRIAC		QD	**CM**		
		no	**CT**		

MGS Service Parts Ordering - ALL Sizes

DESCRIPTION	**CONFIG. CODE ORDERING** Mounting Hardware & FE conn. included **CODE**
Switch Kit, Reed, Form C, 5m	BT
Switch Kit, Reed, Form C, Male Conn.	BM
Switch Kit, Reed, Form A, 5m	RT
Switch Kit, Reed, Form A, Male Conn.	RM
Switch Kit, Triac, 5m	CT
Switch Kit, Triac, Male Conn.	CM
Switch Kit, Hall-effect, Sinking, 5m	KT
Switch Kit, Hall-effect, Sinking, Male Conn.	KM
Switch Kit, Hall-effect, Sourcing, 5m	TT
Switch Kit, Hall-effect, Sourcing, Male Conn.	TM

NOTE: When kit is ordered female connector & all mounting hardware is included

SIZE	**100**	**038****	**062****
Shock Absorbers Light Duty	0910-1479	2403-1062	2406-1063
Shock Absorbers Heavy Duty	0910-1480	0605-1006	2406-1062
NPN Sinking Proximity Sensor	2410-1048	2410-1048	2410-1048
PNP Sourcing Proximity Sensor	2410-1053	2410-1053	2410-1053
Switch Rail	2410-8888	2403-8888	2406-8888
Magnet	2410-9020	2410-9020	2410-9020

**MGS038, MGS062 are discontinued, all parts listed are limited to stock on hand.

Switch Ordering NOTES:

To order field retrofit switch and hardware kits for all Tolomatic actuators: SW (Then the model and bore size, and type of switch required)
(Hardware and Form A Reed switch with 5 meter lead for 0.625" bore Mag coupled slide)

Switch ordering method*: SW MGS ☐☐☐ ☐☐

EXAMPLE: SW MGS 062 RK

Switch Kit | Model | Bore Size | Switch Code

*will include mating female QD cable if required

CC CABLE CYLINDER

RODLESS CYLINDER

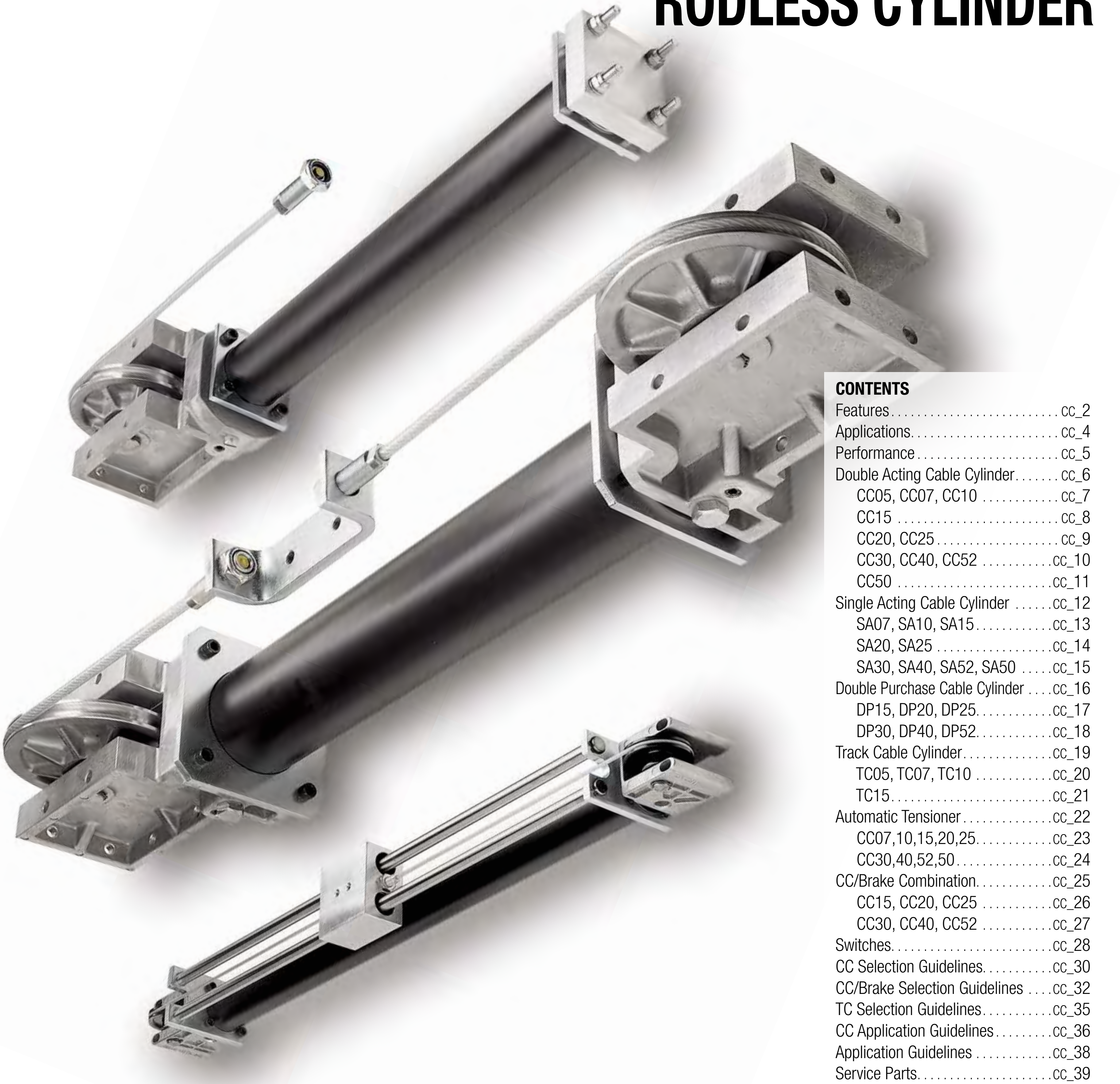

CONTENTS

CABLE CYLINDER

ENDURANCE TECHNOLOGY℠

A Tolomatic Design Principle

Endurance Technology features are designed for maximum durability to provide extended service life.

Tolomatic invented the first ever rodless cylinder in 1956 - the cable cylinder. First designed into the bagger/sealer used in the flour industry the cable cylinder continues to power applications in the 21st century. Built-to-order in stroke lengths up to 282 inches.

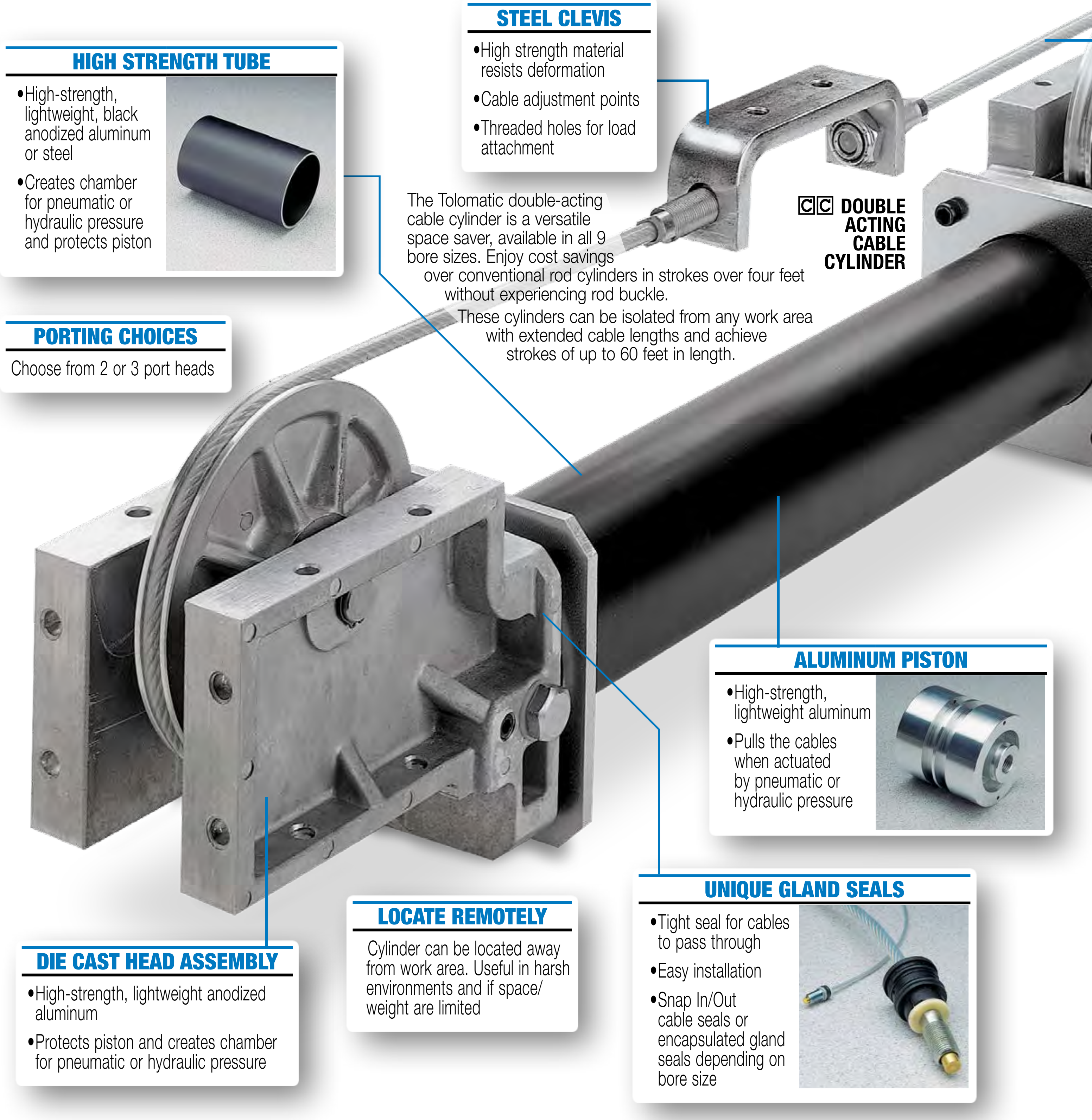

HIGH STRENGTH TUBE

- High-strength, lightweight, black anodized aluminum or steel
- Creates chamber for pneumatic or hydraulic pressure and protects piston

STEEL CLEVIS

- High strength material resists deformation
- Cable adjustment points
- Threaded holes for load attachment

CC DOUBLE ACTING CABLE CYLINDER

The Tolomatic double-acting cable cylinder is a versatile space saver, available in all 9 bore sizes. Enjoy cost savings over conventional rod cylinders in strokes over four feet without experiencing rod buckle.

These cylinders can be isolated from any work area with extended cable lengths and achieve strokes of up to 60 feet in length.

PORTING CHOICES

Choose from 2 or 3 port heads

ALUMINUM PISTON

- High-strength, lightweight aluminum
- Pulls the cables when actuated by pneumatic or hydraulic pressure

DIE CAST HEAD ASSEMBLY

- High-strength, lightweight anodized aluminum
- Protects piston and creates chamber for pneumatic or hydraulic pressure

LOCATE REMOTELY

Cylinder can be located away from work area. Useful in harsh environments and if space/ weight are limited

UNIQUE GLAND SEALS

- Tight seal for cables to pass through
- Easy installation
- Snap In/Out cable seals or encapsulated gland seals depending on bore size

TOLOMATIC…THE RODLESS CYLINDER LEADER

MIL SPEC CABLES

- Field proven to provide millions of cycles of uninterrupted service
- Nylon jacketed aircraft cables manufactured under Mil Spec. MiL-W-83420

SA SINGLE ACTING CABLE CYLINDER

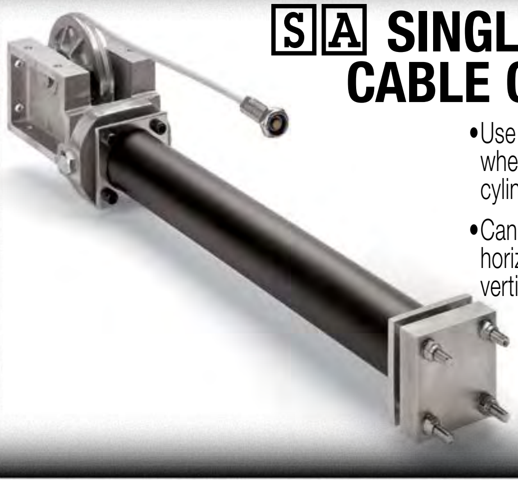

- Use in vertical applications when double acting cable cylinder is not required
- Can be positioned horizontally and achieve vertical movement

DP DOUBLE PURCHASE CABLE CYLINDER

- Doubles the velocity and stroke capacity of cable cylinder without increasing space requirements
- Stroke lengths up to 120 feet (36.6m)
- Isolates cylinder from harsh environments

TC TRACK CABLE CYLINDER

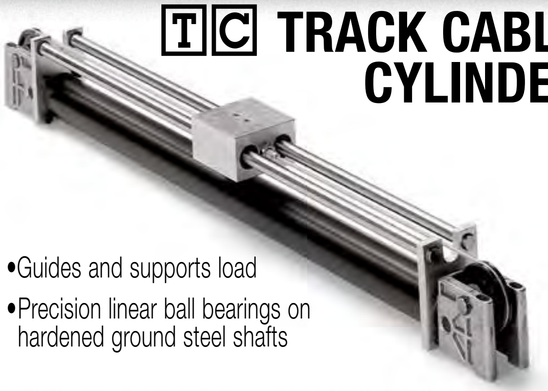

- Guides and supports load
- Precision linear ball bearings on hardened ground steel shafts

FAST DELIVERY
BUILT-TO-ORDER

OPTIONS

AUTO TENSIONER

- Maintains proper cable tension
- Maximizes service life of both cable and seals

CALIPER DISC BRAKE HM HN

- Best mounting choice in most applications

STEEL TUBE

- For extra strength & use in harsh environments

3 PORTED HEAD

- For convenient air connection

SWITCHES

- Available in Reed and Triac
- 15ft. cable with flying leads; available with quick-disconnect couplers

SEALS OF VITON® MATERIAL V

- Long lasting seal option
- High temperature applications

EXTRA CABLE XA XB

- To remotely locate cable cylinder

CC Cable Cylinder

APPLICATIONS

Tolomatic invented the first ever rodless cylinder in 1956 - the cable cylinder. First designed into the bagger/sealer used in the flour industry the cable cylinder continues to power applications in the 21st century. The cable cylinder has been a key component in the following industries:

- Packaging
- Automotive
- Food & Beverage
- Material Handling & Conveying
- Plastic Injection Molding
- Metal Processing
- Paper and Textiles
- Medical
- Electronics
- Printing
- Many Others

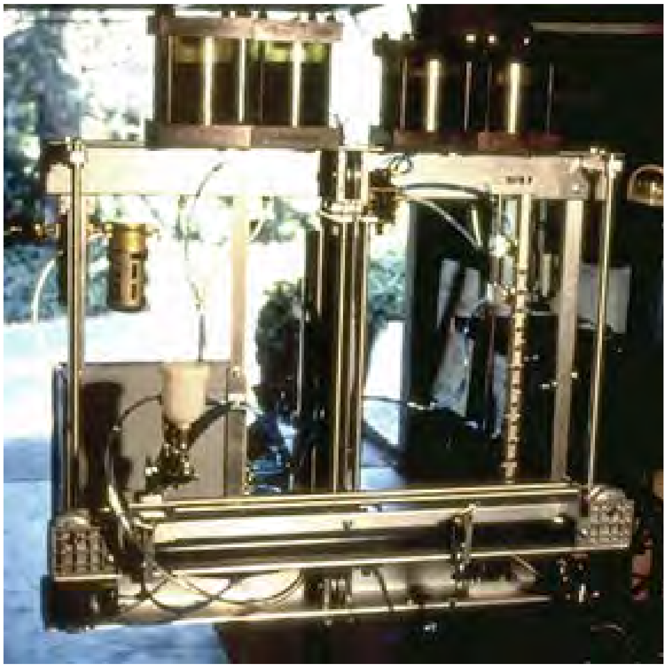

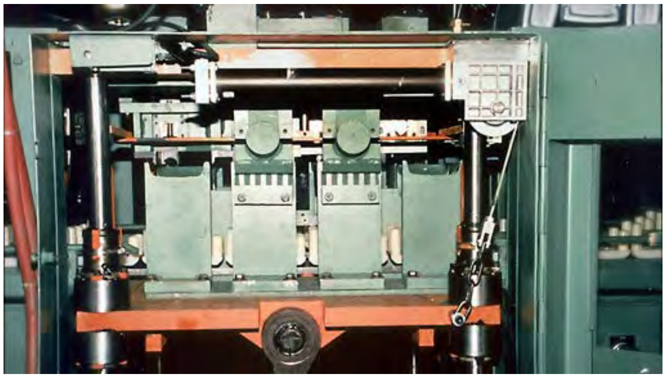

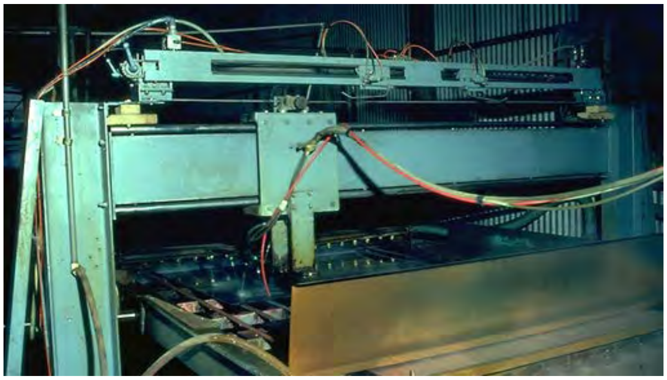

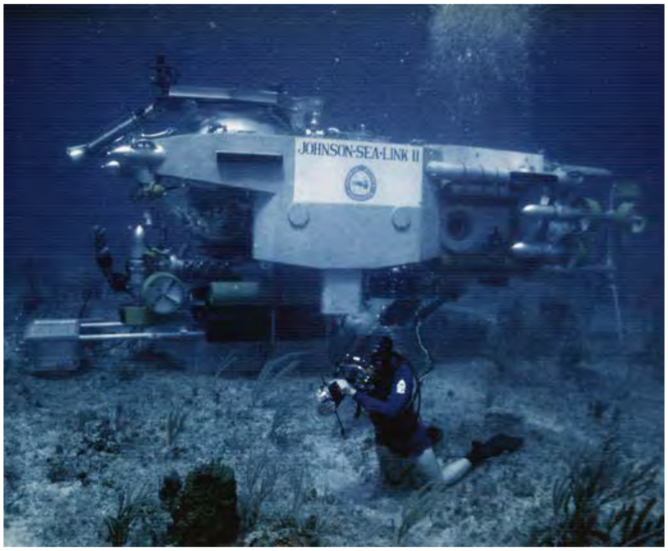

PERFORMANCE

CABLE CYLINDER THEORETICAL FORCE VS PRESSURE

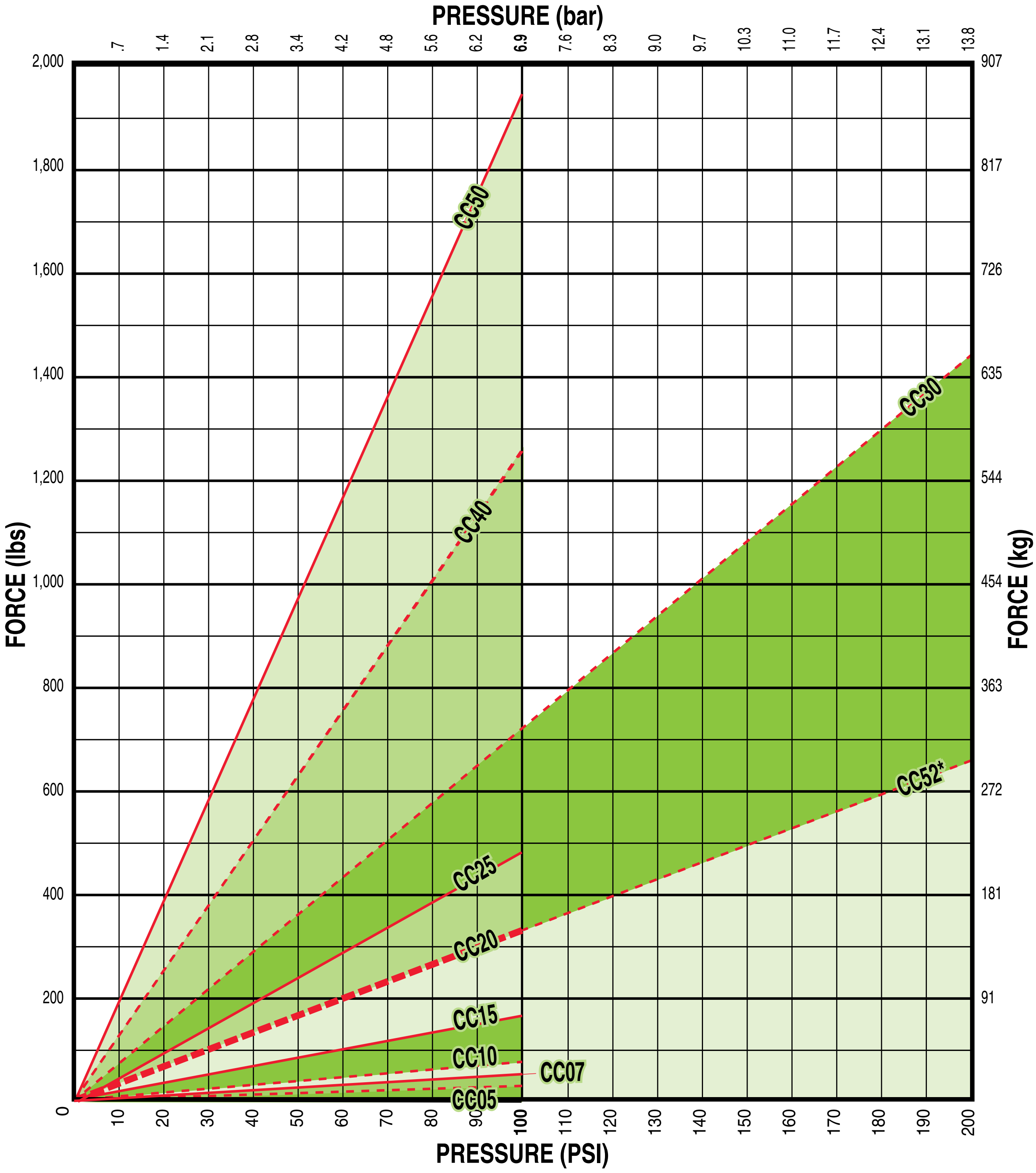

*CC52 up to 500 psi

CC Double Acting Cable Cylinder - All Sizes

FEATURES AND OPTIONS

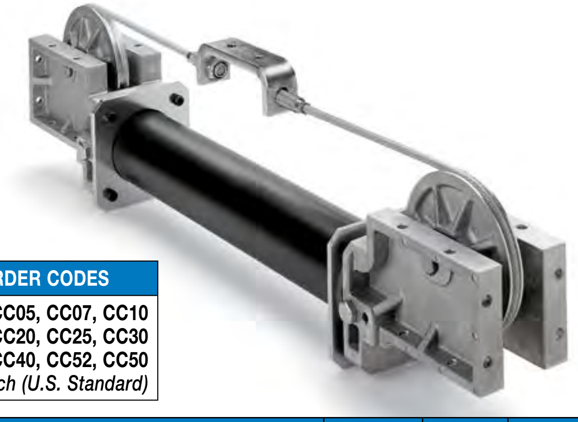

ORDER CODES

CC05, CC07, CC10
CC15, CC20, CC25, CC30
CC40, CC52, CC50
inch (U.S. Standard)

The Tolomatic double-acting cable cylinder is a versatile space saver, available in all 9 bore sizes. Enjoy cost savings over conventional rod cylinders in strokes over four feet without experiencing rod buckle.

These cylinders can be isolated from any work area with extended cable lengths. Contact Tolomatic to achieve strokes of up to 60 feet in length.

CC OPTIONS	Order Code	Page	CC05	CC07	CC10	CC15	CC20	CC25	CC30	CC40	CC52	CC50
Auto Tensioner w/ one 1" Stroke Unit	HI, HJ	CC_22	–	OP	OP	OP	OP	OP	OP	OP	OP	–
Auto Tensioner w/ two 1" Stroke Units	HI, HJ	CC_22	–	OP	OP	OP	OP	OP	OP	OP	OP	–
Auto Tensioner w/ one 2" Stroke Unit	HK,HL	CC_22	–	–	–	–	OP	OP	OP	OP	OP	OP
Auto Tensioner w/ two 2" Stroke Units	HK,HL	CC_22	–	–	–	–	OP	OP	OP	OP	OP	OP
Caliper Disc Brake	HM, HN	CC_25	–	–	–	OP	OP	OP	OP	OP	OP	OP
Switches (DC Reed & Triac)	(several)	CC_28	OP	OP	OP	OP	OP	OP	OP	OP	OP	OP
Aluminum Tube			ST	ST	ST	ST	ST	ST	ST	ST	ST	ST
Steel Tube (Switches NOT available)	S		–	–	OP	OP	OP	OP	OP	OP	OP	-
Seals of Viton® Material	V		–	OP	OP	OP	OP	OP	OP	OP	OP	-
3 Ported Heads	HG		OP	OP	OP	OP	OP	OP	OP	OP	OP	-
MORE INFORMATION	**Page**											
Application Guidelines	CC_36		ST	ST	ST	ST	ST	ST	ST	ST	ST	ST
Cushion Needle Adjustment	CC_38		–	ST	ST	ST	ST	ST	ST	ST	ST	ST
Ordering	CC_40		ST	ST	ST	ST	ST	ST	ST	ST	ST	ST
Selection	CC_30		ST	ST	ST	ST	ST	ST	ST	ST	ST	ST
Caliper Disc Brake Option Selection	CC_32		–	–	–	OP	OP	OP	OP	OP	OP	OP
STANDARD FEATURE	**Page**											
Fixed Orifice Cushions	CC_38		–	ST	ST	–	–	–	–	–	–	–
Adjustable Cushions	CC_38		–	–	–	ST	ST	ST	ST	ST	ST	ST
Single Ported Head			ST	ST	ST	ST	ST	ST	ST	ST	ST	ST

– = Not Available   OP = Optional   ST = Standard

Double Acting Cable Cylinder - CC05, CC07, CC10

OVERALL UNIT SPECIFICATIONS

			CC05	CC07	CC10
BORE SIZE		in	0.50	0.75	1.00
MAX STROKE		in	60	138	282
		mm	*1524*	*3505*	*7163*
BASE WEIGHT	Alum.	lb	1.38	1.38	1.38
		kg	*0.63*	*0.63*	*0.63*
	Steel	lb	NA	NA	1.49
		kg	*NA*	*NA*	*0.68*
WEIGHT PER UNIT OF STROKE	Alum.	lb per in	0.011	0.034	0.043
		g per mm	*0.197*	*0.606*	*0.768*
	Steel	lb per in	NA	NA	0.125
		g per mm	*NA*	*NA*	*2.244*
MAX PRESSURE		PSI	100	100	100
		bar	*6.9*	*6.9*	*6.9*
MAX TEMP		°F	140	140	140
		°C	*60*	*60*	*60*
MAX FORCE OUTPUT		lb	19.4	43.5	77.9
		N	*86.3*	*193.5*	*346.5*

TUBING SPECIFICATIONS

			CC05	CC07	CC10
DEAD LENGTH*		in	1.11	1.18	1.31
		mm	*28.2*	*30*	*33.3*
WALL THICKNESS		in	0.0937	0.125	0.125
		mm	*2.38*	*3.175*	*3.175*
MATERIAL			Alum.	Alum.	Alum or Steel
TUBE SUPPORT SPAN	Alum.	in	60	60	72
		mm	*1524*	*1524*	*1829*
	Steel	in	NA	NA	78
		mm	*NA*	*NA*	*1981*

*Add to stroke length to determine overall length

CABLE SPECIFICATIONS

		CC05	CC07	CC10
WIRE DIA	in	0.0468	0.0468	0.0468
	mm	*1.189*	*1.189*	*1.189*
NYLON O.D.	in	0.0937	0.0937	0.0937
	mm	*2.38*	*2.38*	*2.38*
STRAND CONFIGURATION		7 x 7	7 x 7	7 x 7
TENSILE STRENGTH	lb	270	270	270
	kg	*122.47*	*122.47*	*122.47*
PROOF-LOAD TORQUE	in-lb	15	15	15
	N-m	*1.69*	*1.69*	*1.69*
PRETENSIONING TORQUE	in-lb	2.5	2.5	2.5
	N-m	*0.28*	*0.28*	*0.28*

THEORETICAL FORCE vs PRESSURE

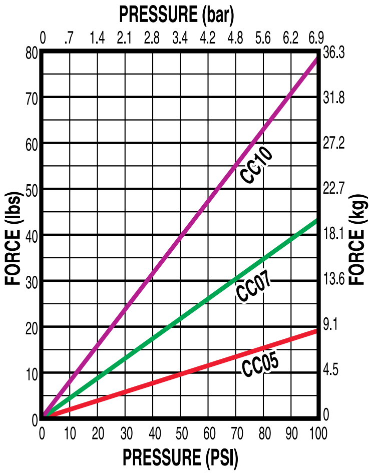

CUSHION DATA

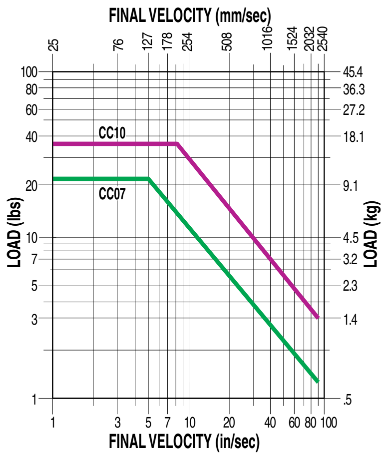

CC10
CC07
CC05

NOTE: The CC05 cylinder does not have cushions.

DIMENSIONS

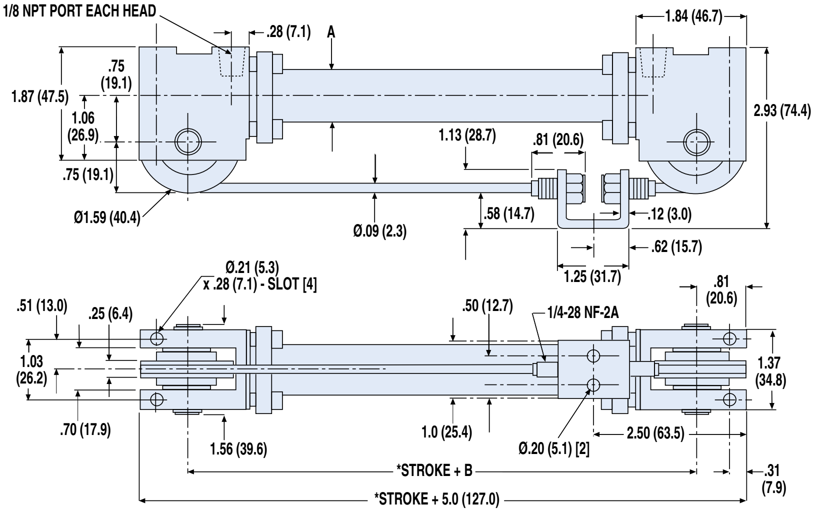

*If M option (magnet) is ordered add 1.62" (41.2mm) to the overall length

	CC05	CC07	CC10
A	Ø.63 (16.0)	Ø1.00 (25.4)	Ø1.25 (31.8)
B	3.38 (85.8)	3.43 (87.1)	3.43 (87.1)

Dimensions in inches, in parentheses ( ) dimensions in millimeters

Double Acting Cable Cylinder - CC15

OVERALL UNIT SPECIFICATIONS

			CC15
BORE SIZE		in	1.50
MAX STROKE		in	280
		mm	*7112*
BASE WEIGHT	Alum.	lb	5.12
		kg	*2.32*
	Steel	lb	5.27
		kg	*2.39*
WEIGHT PER UNIT OF STROKE	Alum.	lb per in	0.063
		g per mm	*1.1259*
	Steel	lb per in	0.181
		g per mm	*3.2322*
MAX PRESSURE		PSI	100
		bar	*6.9*
MAX TEMP		°F	140
		°C	*60*
MAX FORCE OUTPUT		lb	174
		N	*774.0*

TUBING SPECIFICATIONS

			CC15
DEAD LENGTH*		in	3.40
		mm	*86.4*
WALL THICKNESS		in	0.125
		mm	*3.175*
MATERIAL			Alum. or Steel
TUBE SUPPORT SPAN	Alum.	in	84
		mm	*2134*
	Steel	in	90
		mm	*2286*

*Add to stroke length to determine overall length

CABLE SPECIFICATIONS

		CC15
WIRE DIA	in	0.0937
	mm	*2.380*
NYLON O.D.	in	0.187
	mm	*4.750*
STRAND CONFIGURATION		7 x 7
TENSILE STRENGTH	lb	920
	kg	*417.30*
PROOF-LOAD TORQUE	in-lb	45
	N-m	*5.08*
PRETENSIONING TORQUE	in-lb	8
	N-m	*0.90*

THEORETICAL FORCE vs PRESSURE

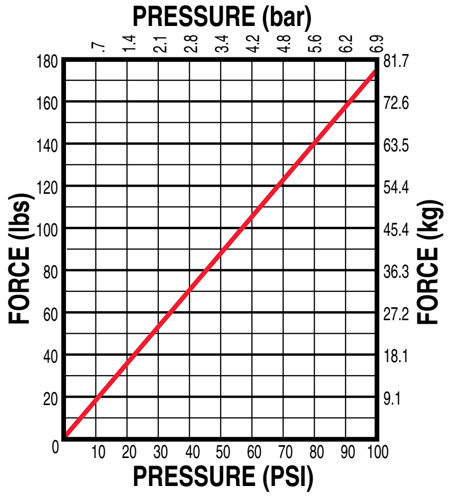

CUSHION DATA

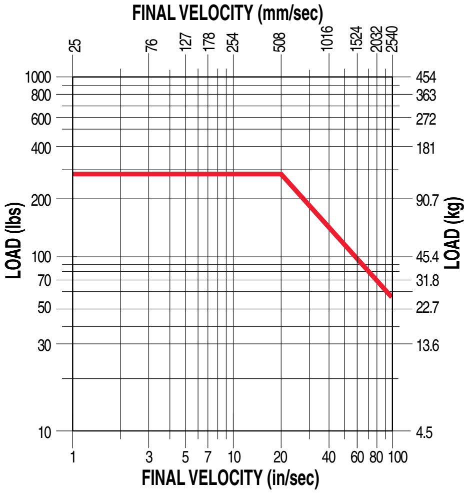

🟥 **CC15**

DIMENSIONS

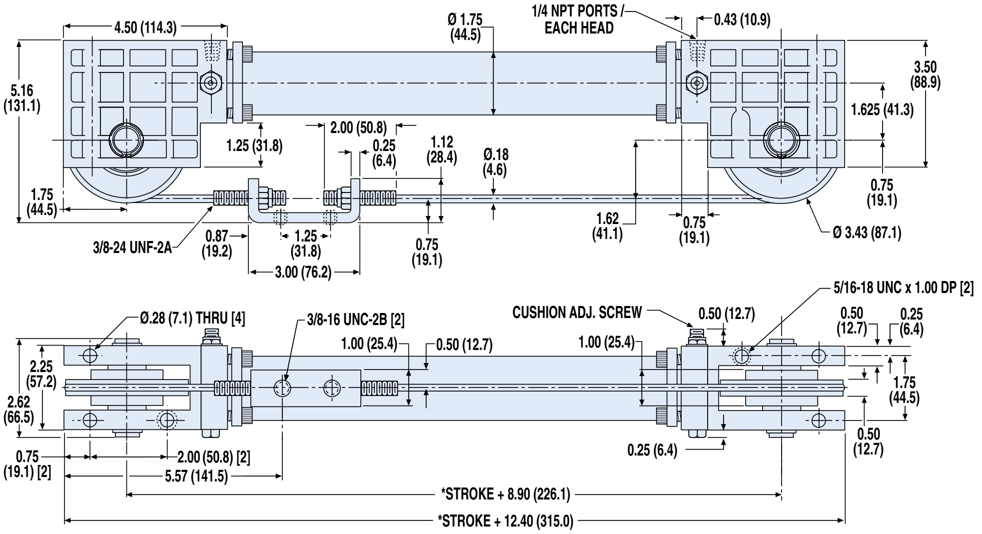

*If M option (magnet) is ordered add .375" (9.5 mm) to the overall length

Dimensions in inches, in parentheses ( ) dimensions in millimeters

Double Acting Cable Cylinder - CC20, CC25

OVERALL UNIT SPECIFICATIONS

			CC20	CC25
BORE SIZE		in	2.00	2.50
MAX STROKE		in	281	281
		mm	*7137*	*7137*
BASE WEIGHT	Alum.	lb	12.44	12.9
		kg	*5.64*	*5.85*
	Steel	lb	12.9	13.48
		kg	*5.85*	*6.11*
WEIGHT PER UNIT OF STROKE	Alum.	lb per in	0.083	0.103
		g per mm	*1.482*	*1.839*
	Steel	lb per in	0.236	0.292
		g per mm	*4.214*	*5.214*
MAX PRESSURE		PSI	200	200
		bar	*13.8*	*13.8*
MAX TEMP		°F	140	140
		°C	*60*	*60*
MAX FORCE OUTPUT		lb	618	972
		N	*2749*	*4324*

TUBING SPECIFICATIONS

			CC20	CC25
DEAD LENGTH*		in	3.00	3.00
		mm	*76.2*	*76.2*
WALL THICKNESS		in	0.125	0.125
		mm	*3.175*	*3.175*
MATERIAL			Alum or Steel	Alum or Steel
TUBE SUPPORT SPAN	Alum.	in	90	96
		mm	*2286*	*2438*
	Steel	in	96	108
		mm	*2438*	*2743*

*Add to stroke length to determine overall length

CABLE SPECIFICATIONS

		CC20	CC25
WIRE DIA	in	0.125	0.125
	mm	*3.175*	*3.175*
NYLON O.D.	in	0.250	0.250
	mm	*6.350*	*6.350*
STRAND CONFIGURATION		7 x 19	7 x 19
TENSILE STRENGTH	lb	2000	2000
	kg	*907.18*	*907.18*
PROOF-LOAD TORQUE	in-lb	115	115
	N-m	*12.99*	*12.99*
PRETENSIONING TORQUE	in-lb	46.0	73.0
	N-m	*5.20*	*8.25*

THEORETICAL FORCE vs PRESSURE

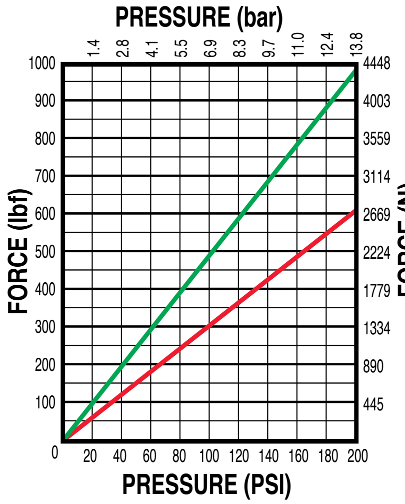

CUSHION DATA

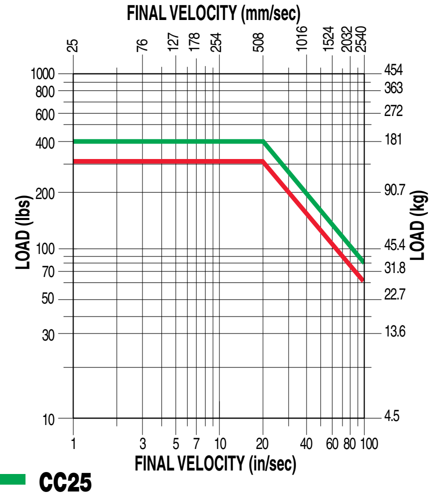

🟩 **CC25**
🟥 **CC20**

DIMENSIONS

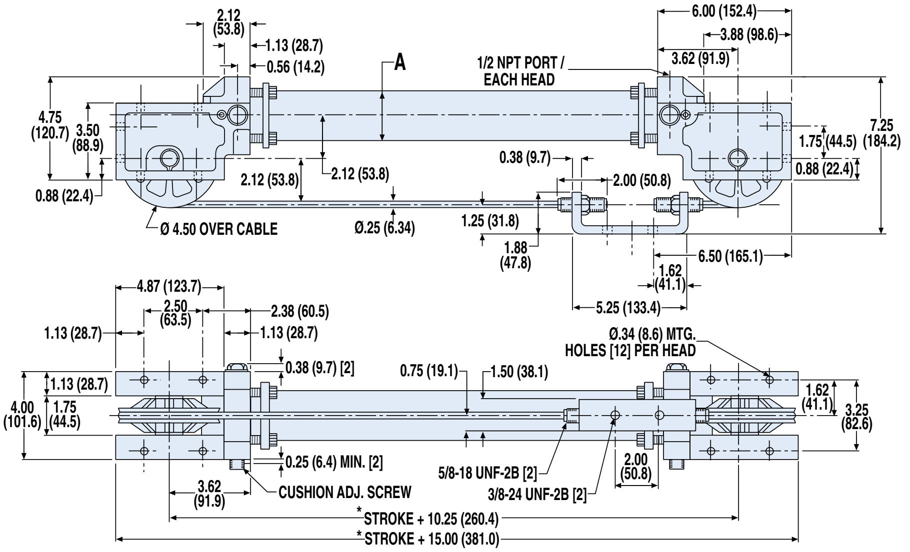

*If M option (magnet) is ordered add 0.375" (9.5 mm) to the overall length

Dimensions in inches, in parentheses ( ) dimensions in millimeters

	CC20	CC25
A	Ø2.25 (57.2)	Ø2.75 (69.9)

Double Acting Cable Cylinder - CC30, CC40, CC52

OVERALL UNIT SPECIFICATIONS

			CC30	CC40	CC52
BORE SIZE		in	3.00	4.00	2.00
MAX STROKE		in	280	279	280
		mm	*7112*	*7087*	*7112*
BASE WEIGHT	Alum.	lb	18.69	20.75	12.44
		kg	*8.48*	*9.41*	*5.64*
	Steel	lb	19.45	22.09	12.9
		kg	*8.82*	*10.02*	*5.85*
WEIGHT PER UNIT OF STROKE	Alum.	lb per in	0.12	0.159	0.081
		g per mm	*2.143*	*2.839*	*1.446*
	Steel	lb per in	0.334	0.459	0.236
		g per mm	*5.965*	*8.197*	*4.214*
MAX PRESSURE		PSI	200	100	500
		bar	*13.8*	*6.9*	*34.5*
MAX TEMP		°F	140	140	140
		°C	*60*	*60*	*60*
MAX FORCE OUTPUT		lb	1398.4	1248.9	1532.4
		N	*6220*	*5555*	*6816*

TUBING SPECIFICATIONS

			CC30	CC40	CC52
DEAD LENGTH*		in	3.50	4.50	3.00
		mm	*88.9*	*114.3*	*76.2*
WALL THICKNESS		in	0.125	0.125	0.125
		mm	*3.175*	*3.175*	*3.175*
MATERIAL			Alum or Steel	Alum or Steel	Alum or Steel
TUBE SUPPORT SPAN	Alum.	in	102	108	96
		mm	*2591*	*2743*	*2438*
	Steel	in	120	132	96
		mm	*3048*	*3353*	*2438*

*Add to stroke length to determine overall length

CABLE SPECIFICATIONS

		CC30	CC40	CC52
WIRE DIA	in	0.187	0.187	0.187
	mm	*4.750*	*4.750*	*4.750*
NYLON O.D.	in	0.312	0.312	0.312
	mm	*7.925*	*7.925*	*7.925*
STRAND CONFIGURATION		7 x 19	7 x 19	7 x 19
TENSILE STRENGTH	lb	4200	4200	4200
	kg	*1905*	*1905*	*1905*
PROOF-LOAD TORQUE	in-lb	210	210	210
	N-m	*23.73*	*23.73*	*23.73*
PRETENSIONING TORQUE	in-lb	105	187.5	115
	N-m	*11.86*	*21.19*	*12.99*

THEORETICAL FORCE vs PRESSURE

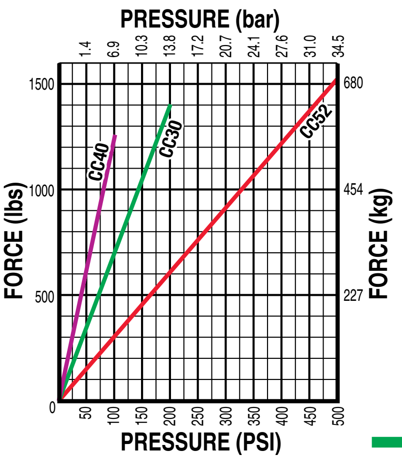

CUSHION DATA

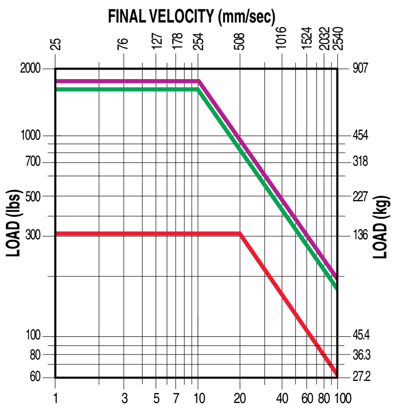

🟩 **CC30**
🟪 **CC40**
🟥 **CC52**

DIMENSIONS

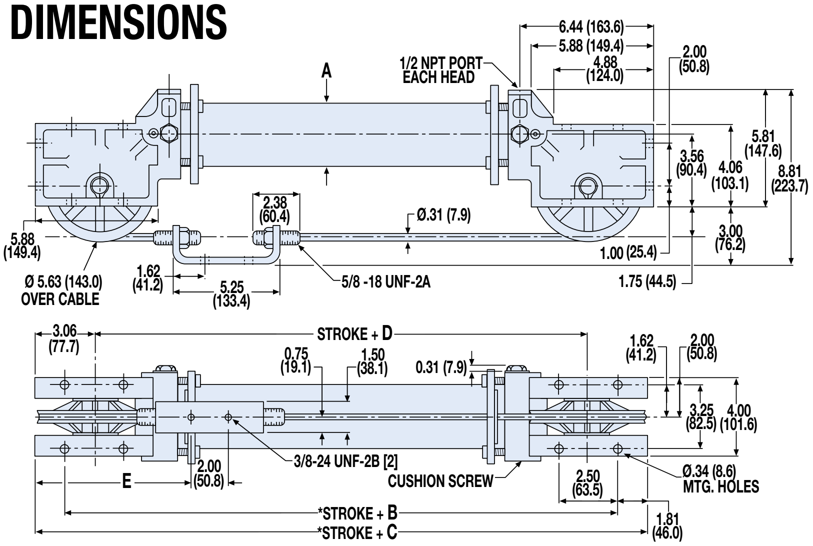

	CC30	CC40	CC52
A	Ø3.25 (82.6)	Ø4.25 (108.0)	Ø2.25 (57.2)
B	13.87(352.3)	14.87 (377.7)	13.87 (352.3)
C	17.50 (444.5)	18.50 (469.9)	17.50 (444.5)
D	11.38 (289.1)	12.38 (314.5)	11.38 (289.1)
E	7.75 (196.9)	8.25 (209.6)	7.75 (196.9)

*If M option (magnet) is ordered add .375" (9.5 mm) to the overall length

Dimensions in inches, in parentheses ( ) dimensions in millimeters

Double Acting Cable Cylinder - CC50

OVERALL UNIT SPECIFICATIONS

			CC50
BORE SIZE		in	5.00
MAX STROKE		in	134
		mm	*3404*
BASE WEIGHT	Alum.	lb	30.75
		kg	*13.95*
WEIGHT PER UNIT OF STROKE	Alum.	lb per in	0.202
		g per mm	*3.786*
MAX PRESSURE		PSI	100
		bar	*6.9*
MAX TEMP		°F	140
		°C	*60*
MAX FORCE OUTPUT		lb	1919
		N	*8536*

THEORETICAL FORCE vs PRESSURE

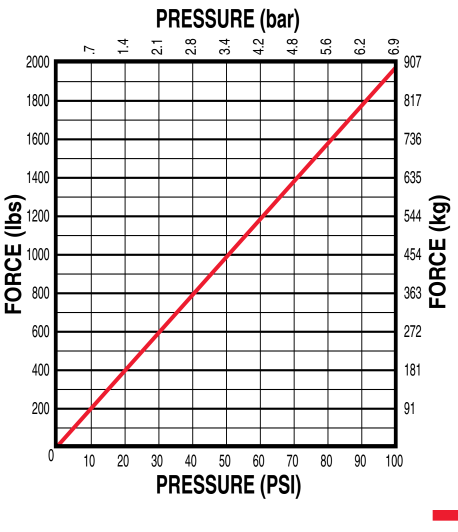

🟥 **CC50**

NOTE: The CC50 cylinder does not have cushions.

TUBING SPECIFICATIONS

			CC50
DEAD LENGTH*		in	6.00
		mm	*152.4*
WALL THICKNESS		in	0.125
		mm	*3.175*
MATERIAL			Alum.
TUBE SUPPORT SPAN	Alum.	in	166.8
		mm	*4237*

*Add to stroke length to determine overall length

CABLE SPECIFICATIONS

		CC50
WIRE DIA	in	0.25
	mm	*6.350*
NYLON O.D.	in	0.375
	mm	*9.525*
STRAND CONFIGURATION		7 x 19
TENSILE STRENGTH	lb	7000
	kg	*3175.13*
PROOF-LOAD TORQUE	in-lb	325
	N-m	*36.72*
PRETENSIONING TORQUE	in-lb	180
	N-m	*20.34*

DIMENSIONS

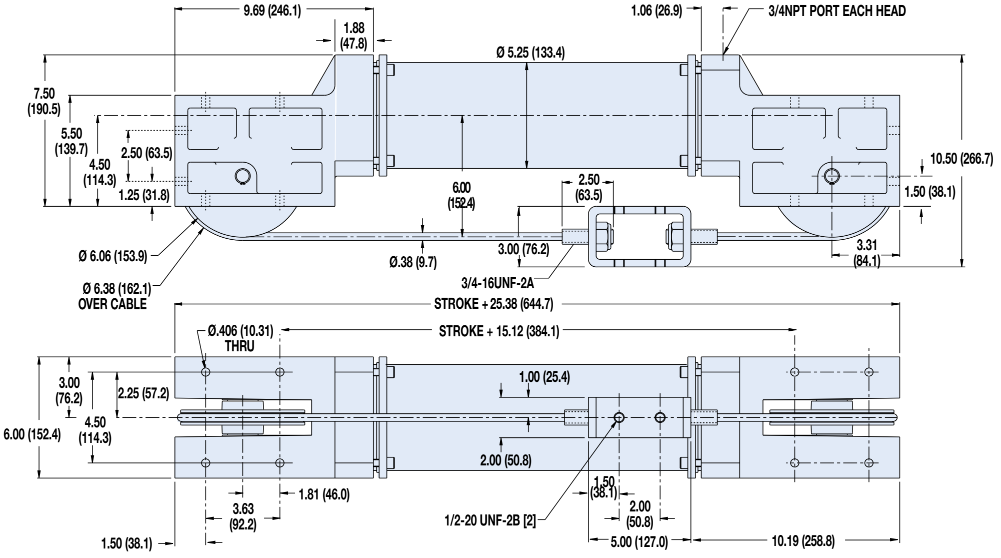

Dimensions in inches, in parentheses ( ) dimensions in millimeters

SA Single Acting Cable Cylinder - All Sizes

FEATURES AND OPTIONS

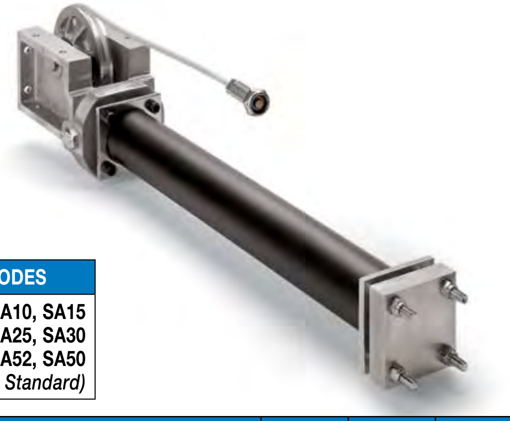

ORDER CODES

SA07, SA10, SA15
SA20, SA25, SA30
SA40, SA52, SA50
inch (U.S. Standard)

When a standard double-acting cable cylinder is not necessary in vertical applications, Tolomatic single-acting cable cylinders provide a cost savings advantage. Ideal for vertical lifting applications, these cylinders may be positioned horizontally and still achieve a vertical movement. Tolomatic single-acting cylinders are available in 8 bore sizes ranging from 3/4-inch to 5 inches with optional switches.

SA OPTIONS	Order Code	Page	SA07	SA10	SA15	SA20	SA25	SA30	SA40	SA52	SA50
Switches (DC Reed & Triac)	(several)	CC_28	OP	OP	OP	OP	OP	OP	OP	OP	-
Aluminum Tube			ST	ST	ST	ST	ST	ST	ST	ST	ST
Steel Tube (Switches NOT available)	S		–	OP	OP	OP	OP	OP	OP	OP	-
Seals of Viton® Material	V		OP	OP	OP	OP	OP	OP	OP	OP	-
3 Ported Heads	HG		OP	OP	OP	OP	OP	OP	OP	OP	-
MORE INFORMATION	**Page**										
Application Guidelines	CC_36		ST	ST	ST	ST	ST	ST	ST	ST	ST
Cushion Needle Adjustment	CC_38		ST	ST	ST	ST	ST	ST	ST	ST	ST
Ordering	CC_40		ST	ST	ST	ST	ST	ST	ST	ST	ST
Selection	CC_30		ST	ST	ST	ST	ST	ST	ST	ST	ST
STANDARD FEATURE	**Page**										
Fixed Orifice Cushions	CC_38		ST	ST	–	–	–	–	–	–	–
Adjustable Cushions	CC_38		–	–	ST	ST	ST	ST	ST	ST	ST
Single Ported Head			ST	ST	ST	ST	ST	ST	ST	ST	ST

– = Not Available OP = Optional ST = Standard

NOTE: See corresponding CC (double actting cable cylinder) for performance, tubing and cable specifications Page CC_7 to Page CC_11

Single Acting Cable Cylinder - SA07, SA10, SA15

SA07, SA10

DIMENSIONS

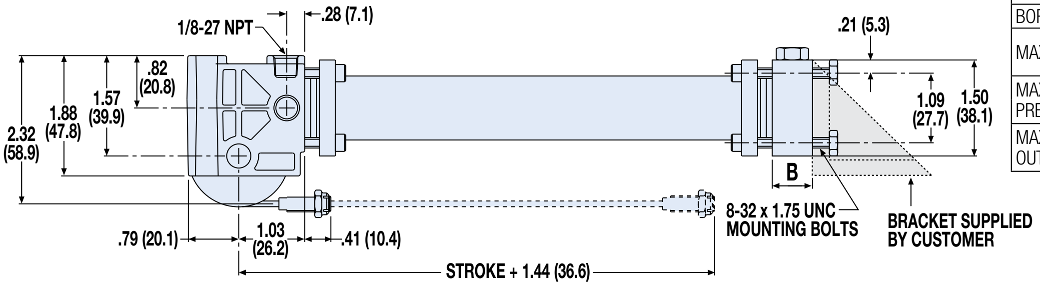

OVERALL UNIT SPECIFICATIONS

		SA07	SA10
BORE SIZE	in	0.75	1.00
MAX STROKE	in	138	282
	mm	*3505*	*7163*
MAX PRESSURE	PSI	100	100
	bar	*6.9*	*6.9*
MAX FORCE OUTPUT	lb	43.5	77.9
	N	*193.5*	*346.5*

NOTE: Additional specifications Page CC_7

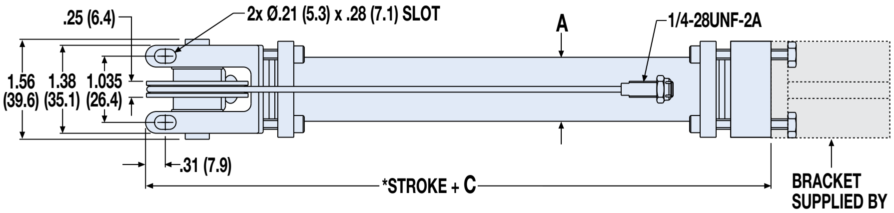

	SA07	SA10
A	Ø 1.00 (25.4)	Ø 1.25 (31.8)
B	0.50 (12.7)	0.63 (16.0)
C	3.62 (92.0)	3.81 (96.8)
D	1.46 (37.1)	1.62 (41.2)

Dimensions in inches, in parentheses ( ) dimensions in millimeters

*If M option (magnet) is ordered add **D** to the overall length

SA15

DIMENSIONS

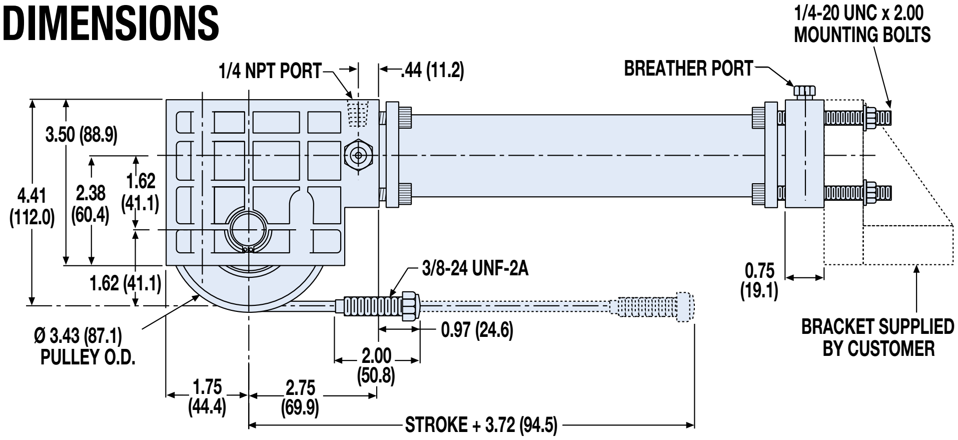

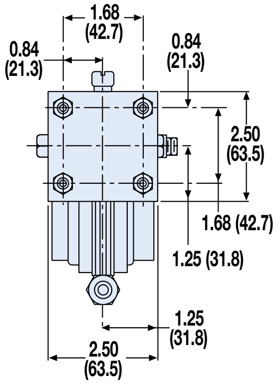

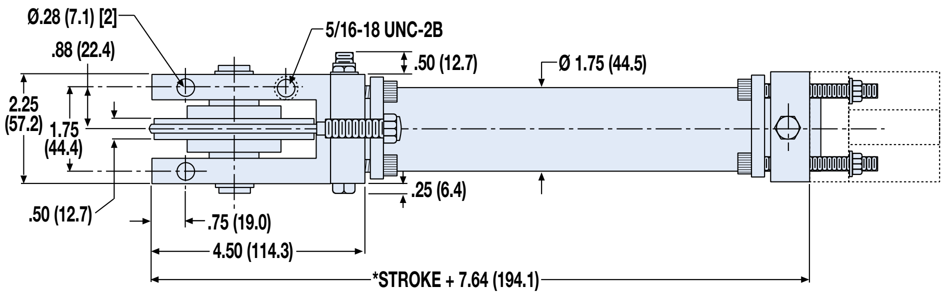

OVERALL UNIT SPECIFICATIONS

		SA15
BORE SIZE	in	1.50
MAX STROKE	in	280
	mm	*7112*
MAX PRESSURE	PSI	100
	bar	*6.9*
MAX FORCE OUTPUT	lb	174
	N	*774.0*

NOTE: Additional specifications Page CC_8

Dimensions in inches, in parentheses ( ) dimensions in millimeters

*If M option (magnet) is ordered add .375" (9.5 mm) to the overall length

3D CAD available at www.tolomatic.com
Always use configurated CAD solid model
to determine critical dimensions

Single Acting Cable Cylinder - SA20, SA25, SA30, SA40, SA52

SA20, SA25

DIMENSIONS

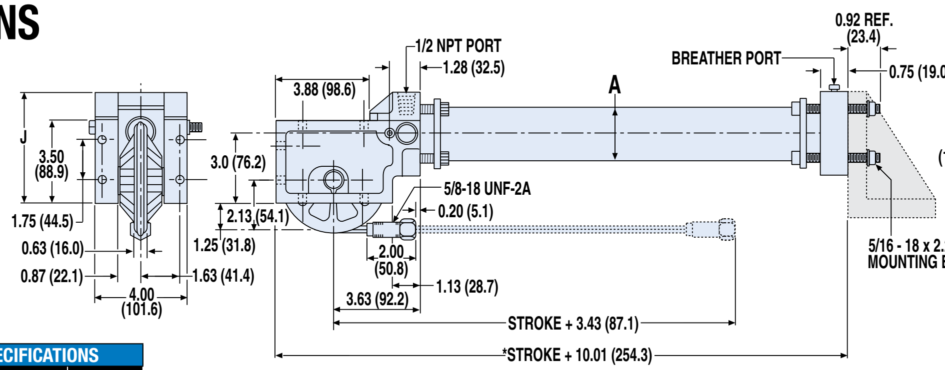

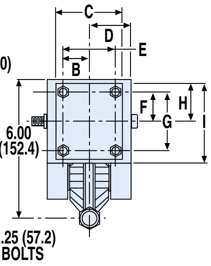

	SA20	SA25
A	Ø 2.25 (57.2)	Ø 2.75 (69.9)
B	1.06 (26.9)	1.23 (31.2)
C	3.00 (76.2)	3.50 (88.9)
D	2.00 (50.8)	2.00 (50.8)
E	2.12 (53.8)	2.47 (62.7)
F	1.06 (26.9)	1.23 (31.2)
G	2.12 (53.8)	2.47 (62.7)
H	1.50 (38.1)	1.75 (44.5)
I	3.25 (82.55)	3.50 (88.9)
J	4.75 (120.7)	4.87 (123.7)

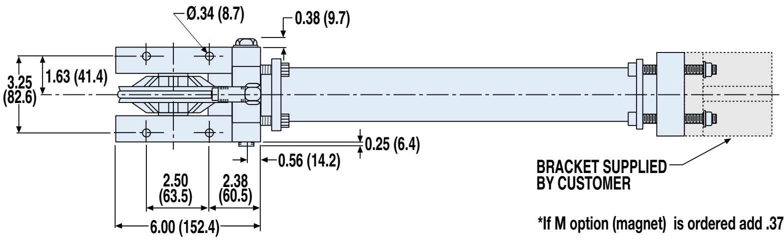

OVERALL UNIT SPECIFICATIONS			
		SA20	SA25
BORE SIZE	in	2.00	2.50
MAX STROKE	in	281	281
	mm	7137	7137
MAX PRESSURE	PSI	200	200
	bar	13.8	13.8
MAX FORCE OUTPUT	lb	618.5	971.9
	N	2751	4323

NOTE: Additional specifications
Page CC_9

*If M option (magnet) is ordered add .375" (9.5 mm) to the overall length

Dimensions in inches, in parentheses ( ) dimensions in millimeters

SA30, SA40, SA52

DIMENSIONS

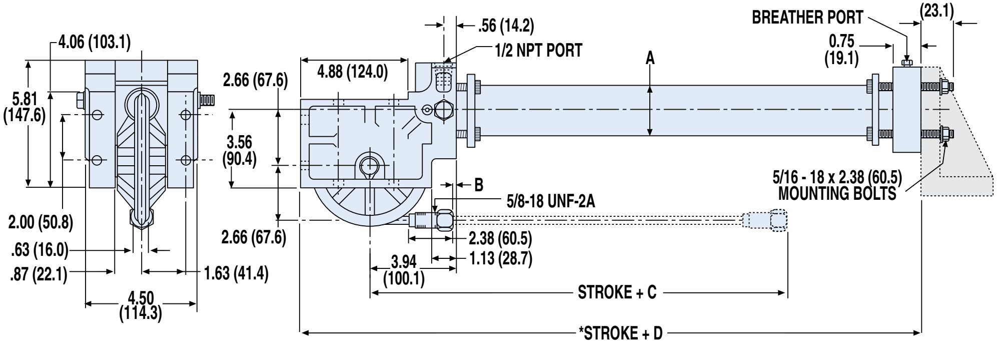

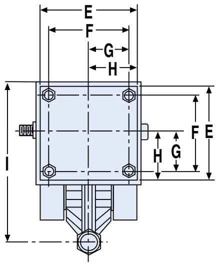

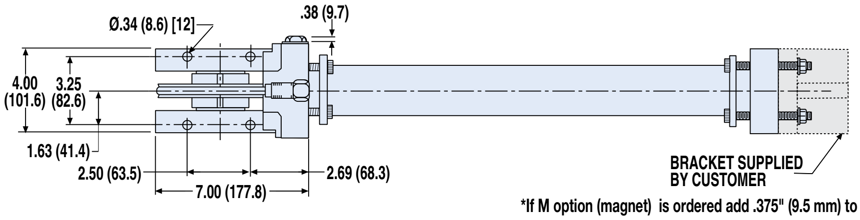

	SA30	SA40	SA52
A	Ø3.25 (82.6)	Ø4.25 (108.0)	Ø2.25 (57.2)
B	-.13 (3.3)	+.63 (16.0)	-.16 (4.1)
C	3.69 (93.7)	4.25 (108.0)	3.72 (94.5)
D	11.50 (292.1)	12.55 (318.8)	11.50 (292.1)
E	4.00 (101.6)	5.00 (127.0)	3.00 (76.2)
F	2.80 (71.1)	3.53 (89.7)	2.12 (53.8)
G	1.40 (35.6)	1.77 (45.0)	1.06 (26.9)
H	2.00 (50.8)	2.50 (63.5)	1.50 (38.1)
I	7.31 (185.7)	7.81 (198.4)	6.81 (76.2)

*If M option (magnet) is ordered add .375" (9.5 mm) to the overall length

OVERALL UNIT SPECIFICATIONS				
		SA30	SA40	SA52
BORE SIZE	in	3.00	4.00	2.50
MAX STROKE	in	280	279	280
	mm	7112	7087	7112
MAX PRESSURE	PSI	200	100	500
	bar	13.8	6.9	34.5
MAX FORCE OUTPUT	lb	1398.4	1248.9	1532.4
	N	6220	5555	6816

Dimensions in inches, in parentheses ( ) dimensions in millimeters

NOTE: Additional specifications
Page CC_10

Single Acting Cable Cylinder - SA50

SA50

DIMENSIONS

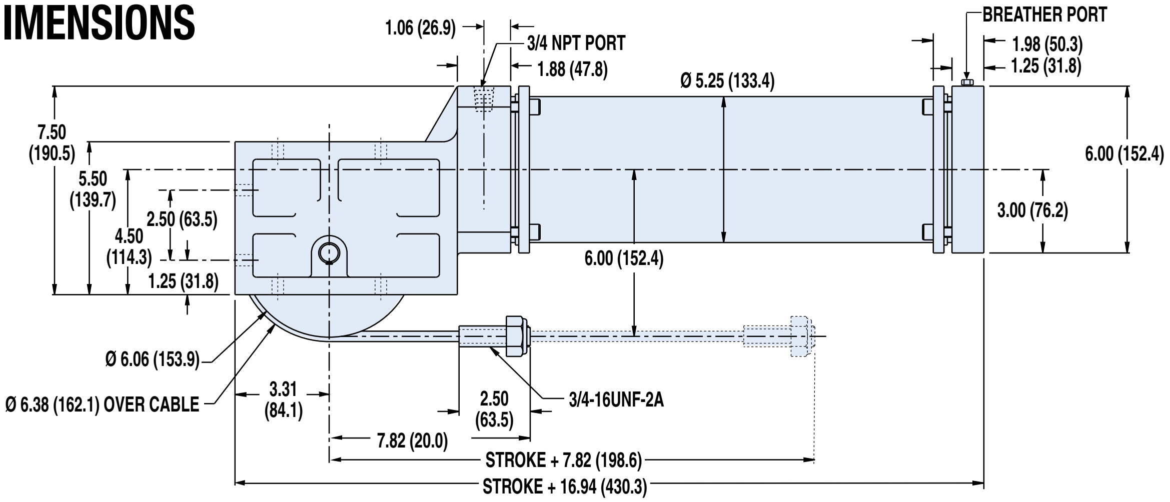

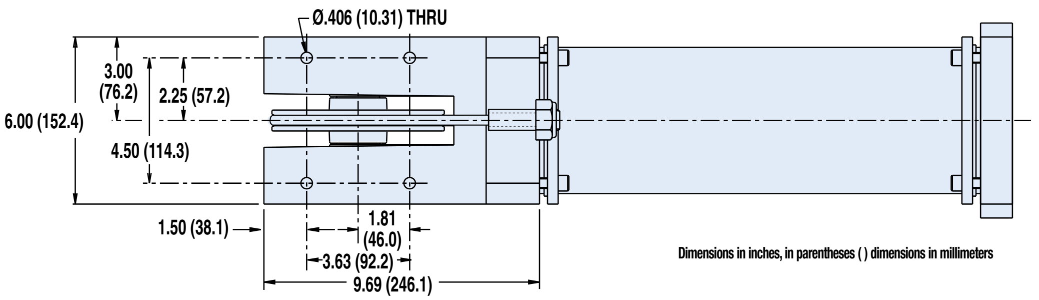

Dimensions in inches, in parentheses ( ) dimensions in millimeters

OVERALL UNIT SPECIFICATIONS

		SA50
BORE SIZE	in	5.00
MAX STROKE	in	134
	mm	*3404*
MAX PRESSURE	PSI	100
	bar	*6.9*
MAX FORCE OUTPUT	lb	1919
	N	*8536*

NOTE: Additional specifications Page CC_11

Double Purchase Cable Cylinder - All Sizes

FEATURES AND OPTIONS

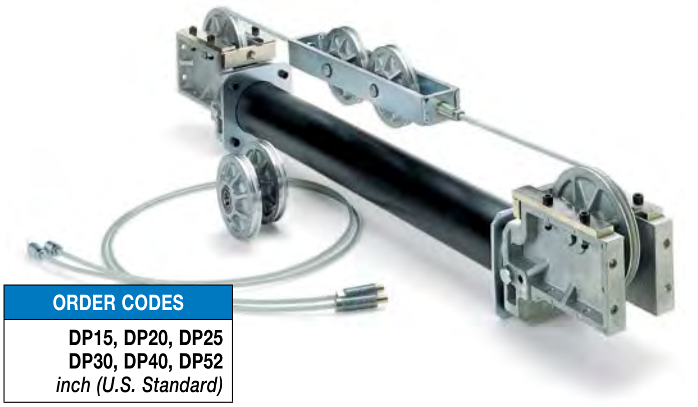

ORDER CODES

DP15, DP20, DP25
DP30, DP40, DP52
inch (U.S. Standard)

The Tolomatic double purchase cable cylinder doubles the velocity and stroke capacity of double-acting cylinders without increasing space requirements. Available in 5 bore sizes, these cylinders can extend stroke lengths up to 120 feet with considerable cost-saving advantages and they can be placed away from hostile environments.

NOTE: Pulleys and cables used on double purchase cable cylinders are always from the next smaller model size.

NOTE: For double purchase applications, select a bore size that will accommodate twice the load force.

DP OPTIONS	Order Code	Page	DP15	DP20	DP25	DP30	DP40	DP52
Auto Tensioner w/ one 1" Stroke Unit	HI, HJ	CC_22	OP	OP	OP	OP	OP	OP
Auto Tensioner w/ two 1" Stroke Units	HI, HJ	CC_22	OP	OP	OP	OP	OP	OP
Auto Tensioner w/ one 2" Stroke Unit	HK,HL	CC_22	–	OP	OP	OP	OP	OP
Auto Tensioner w/ two 2" Stroke Units	HK,HL	CC_22	–	OP	OP	OP	OP	OP
Caliper Disc Brake	HM, HN	CC_25	OP	OP	OP	OP	OP	OP
Switches (DC Reed & Triac)	(several)	CC_28	OP	OP	OP	OP	OP	OP
Aluminum Tube			ST	ST	ST	ST	ST	ST
Steel Tube (Switches NOT available)	S		OP	OP	OP	OP	OP	OP
Seals of Viton® Material	V		OP	OP	OP	OP	OP	OP
3 Ported Heads	HG		OP	OP	OP	OP	OP	OP
MORE INFORMATION	**Page**							
Application Guidelines	CC_36		ST	ST	ST	ST	ST	ST
Cushion Needle Adjustment	CC_38		ST	ST	ST	ST	ST	ST
Ordering	CC_40		ST	ST	ST	ST	ST	ST
Selection	CC_30		ST	ST	ST	ST	ST	ST
Caliper Disc Brake Option Selection	CC_32		OP	OP	OP	OP	OP	OP
STANDARD FEATURE	**Page**							
Fixed Orifice Cushions	CC_38		–	–	–	–	–	–
Adjustable Cushions	CC_38		ST	ST	ST	ST	ST	ST
Single Ported Head			ST	ST	ST	ST	ST	ST

– = Not Available OP = Optional ST = Standard

NOTE: See corresponding CC (double actting cable cylinder) for performance, tubing and cable specifications Page CC_8 to Page CC_10

Double Purchase Cable Cylinder - DP15, DP20, DP25

DP15

DIMENSIONS

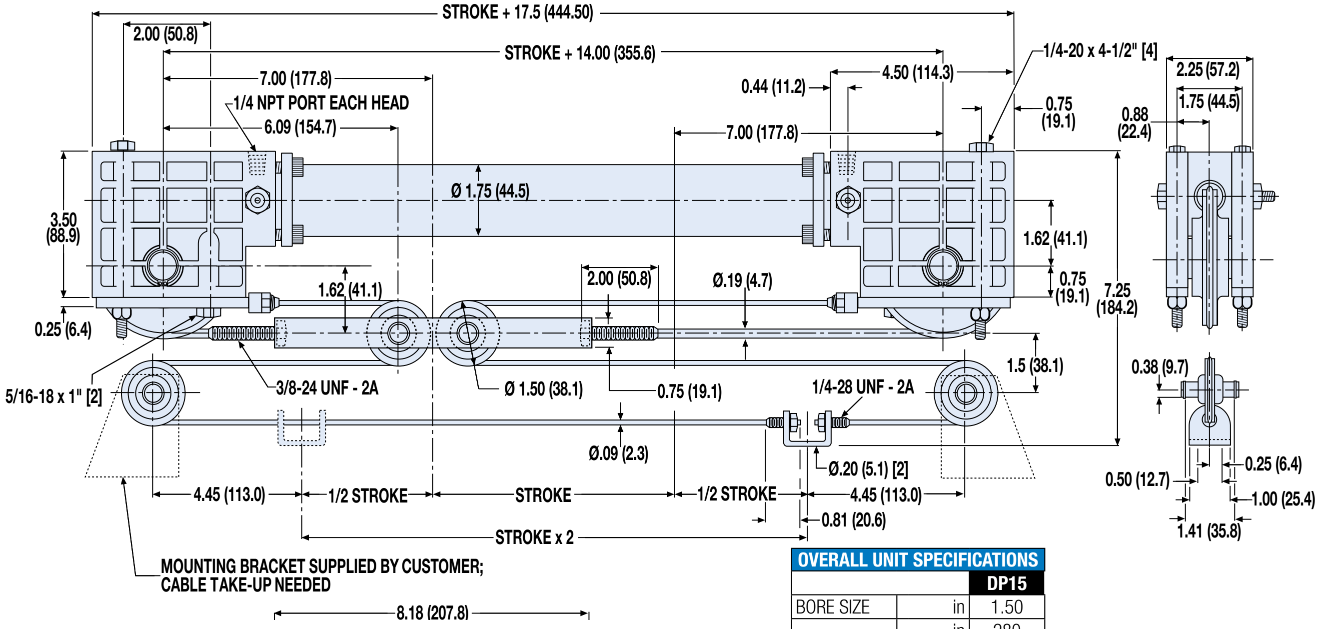

Dimensions in inches, in parentheses ( )
dimensions in millimeters

OVERALL UNIT SPECIFICATIONS

		DP15
BORE SIZE	in	1.50
MAX STROKE	in	280
	mm	*7112*
MAX PRESSURE	PSI	100
	bar	*6.9*
MAX FORCE OUTPUT	lb	174
	N	*774.0*

NOTE: Additional specifications Page CC_8

DP20, DP25

DIMENSIONS

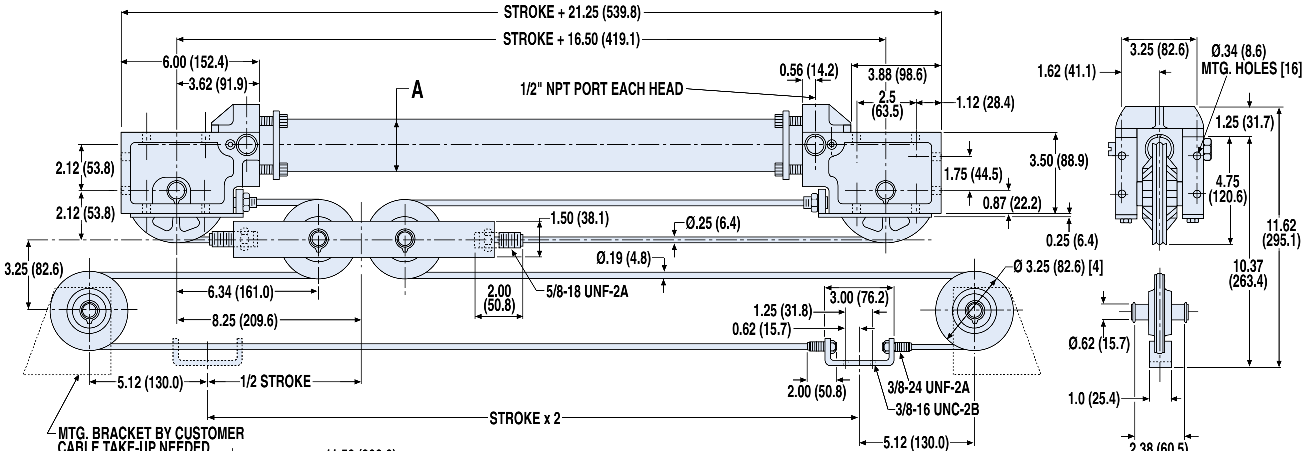

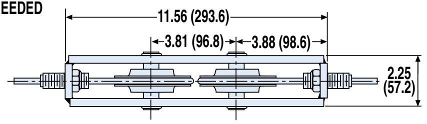

Dimensions in inches, in parentheses ( ) dimensions in millimeters

OVERALL UNIT SPECIFICATIONS

		DP20	DP25
BORE SIZE	in	2.00	2.50
MAX STROKE	in	281	281
	mm	*7137*	*7137*
MAX PRESSURE	PSI	100	100
	bar	*6.9*	*6.9*
MAX FORCE OUTPUT	lb	618.5	971.9
	N	*2751*	*4323*

	DP20	DP25
A	Ø 2.25 (57.2)	Ø 2.75 (69.9)

NOTE: Additional specifications Page CC_9

Double Purchase Cable Cylinder - DP30, DP40, DP52

DP30, DP40, DP52

DIMENSIONS

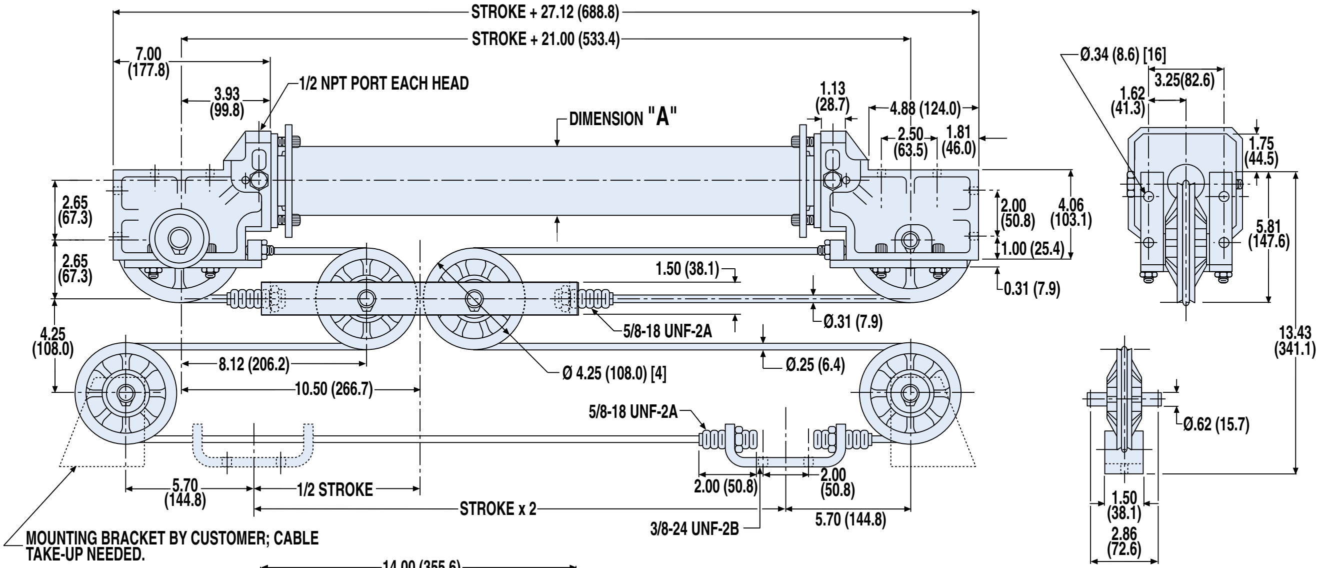

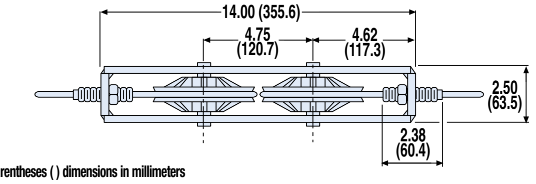

Dimensions in inches, in parentheses ( ) dimensions in millimeters

	DP30	DP40	DP52
A	Ø3.25 (82.6)	Ø4.25 (108.0)	Ø2.25 (57.2)

NOTE: Additional specifications Page CC_10

OVERALL UNIT SPECIFICATIONS				
		DP30	DP40	DP52
BORE SIZE	in	3.00	4.00	2.50
MAX STROKE	in	280	279	280
	mm	*7112*	*7087*	*7112*
MAX PRESSURE	PSI	200	100	500
	bar	*13.8*	*6.9*	*34.5*
MAX FORCE OUTPUT	lb	1398.4	1248.9	1532.4
	N	*6220*	*5555*	*6816*

TC Track Cable Cylinder - All Sizes

FEATURES AND OPTIONS

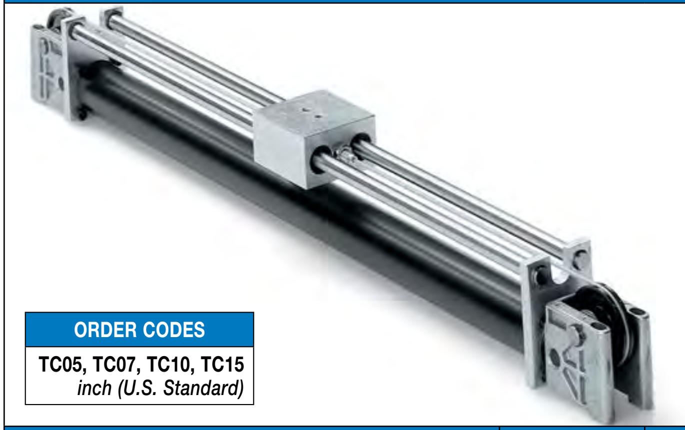

ORDER CODES
TC05, TC07, TC10, TC15 *inch (U.S. Standard)*

Tolomatic track cable cylinders provide a pre-packaged, pre-engineered guide and support system for greater bearing surface and larger load capacities.

An aluminum bearing block guides and supports loads on precision linear ball bearings with hardened ground steel shafts. Available in 4 bore sizes with automatic tensioners and caliper disc brake options on selected models.

TC OPTIONS	Order Code	Page	TC05	TC07	TC10	TC15
Auto Tensioner w/ one 1" Stroke Unit	HI, HJ	CC_22	–	OP	OP	OP
Auto Tensioner w/ two 1" Stroke Units	HI, HJ	CC_22	–	OP	OP	OP
Caliper Disc Brake	HM, HN	CC_25	–	–	–	OP
Switches (DC Reed & Triac)	(several)	CC_28	OP	OP	OP	OP
Aluminum Tube			ST	ST	ST	ST
Steel Tube (Switches NOT available)	S		–	–	OP	OP
Seals of Viton® Material	V		–	OP	OP	OP
3 Ported Heads	HG		OP	OP	OP	OP
MORE INFORMATION	**Page**					
Application Guidelines	CC_36		ST	ST	ST	ST
Cushion Needle Adjustment	CC_38		–	ST	ST	ST
Ordering	CC_40		ST	ST	ST	ST
Selection	CC_30		ST	ST	ST	ST
Caliper Disc Brake Option Selection	CC_32		–	–	–	OP
STANDARD FEATURE	**Page**					
Fixed Orifice Cushions	CC_38		–	ST	ST	–
Adjustable Cushions	CC_38		–	–	–	ST
Single Ported Head			ST	ST	ST	ST

– = Not Available OP = Optional ST = Standard

NOTE: See corresponding CC (double actting cable cylinder) for performance, tubing and cable specifications Page CC_7 to Page CC_8

TC Track Cable Cylinder - TC05, TC07, TC10

LOAD WEIGHT vs STROKE TC05, TC07, TC10 (3/8" Dia. Rods at 0.30" Deflection)

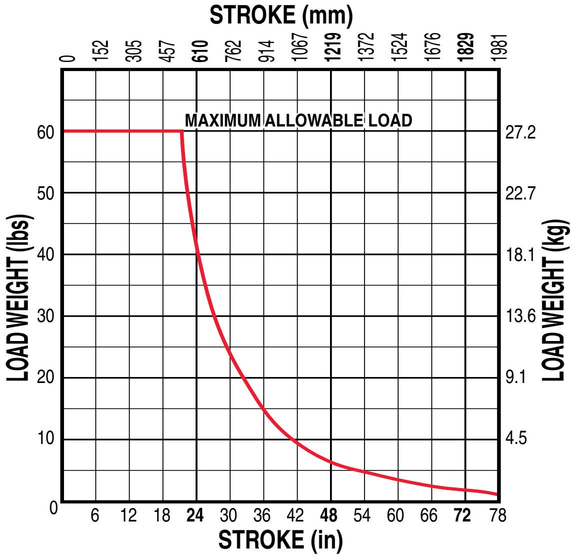

NOTE: Rod deflection must not exceed .30 inches

OVERALL UNIT SPECIFICATIONS				
		TC05	**TC07**	**TC10**
BORE SIZE	in	0.50	0.75	1.00
MAX STROKE	in	67	80	80
	mm	*1701.8*	*2032*	*2032*
MAX PRESSURE	PSI	100	100	100
	bar	*6.9*	*6.9*	*6.9*
MAX FORCE OUTPUT	lb	19.4	43.5	77.9
	N	*86.3*	*193.5*	*346.5*

NOTE: Additional specifications Page CC_7

NOTE: Moderate bending moments are acceptable, so long as the moment load does not exceed 190 inch-pounds.

The diagrams at right, illustrate how this is calculated.

LOAD DISTRIBUTION

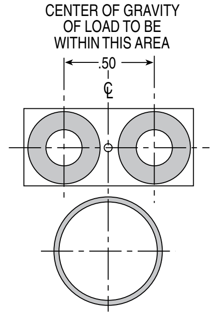

NOTE: Moderate bending moments are acceptable. The moment load must not exceed 30 inch-pounds for the 1/2 -, 3/4 - and 1-inch bore cylinders.

The diagrams, illustrate how this is calculated.

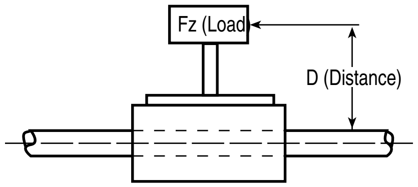

Fz x D ≤ 30 in.-lbs.

DIMENSIONS

	TC05	TC07	TC10
A	0.625	1.000	1.250
mm	15.88	25.40	31.75
B	5.260	5.326	5.322
mm	133.60	135.28	135.18
C	3.44	3.46	3.48
mm	87.4	87.9	88.4
D	2.93	2.96	2.93
mm	74.4	75.2	74.4
E	6.870	6.936	6.932
mm	174.50	176.17	176.07

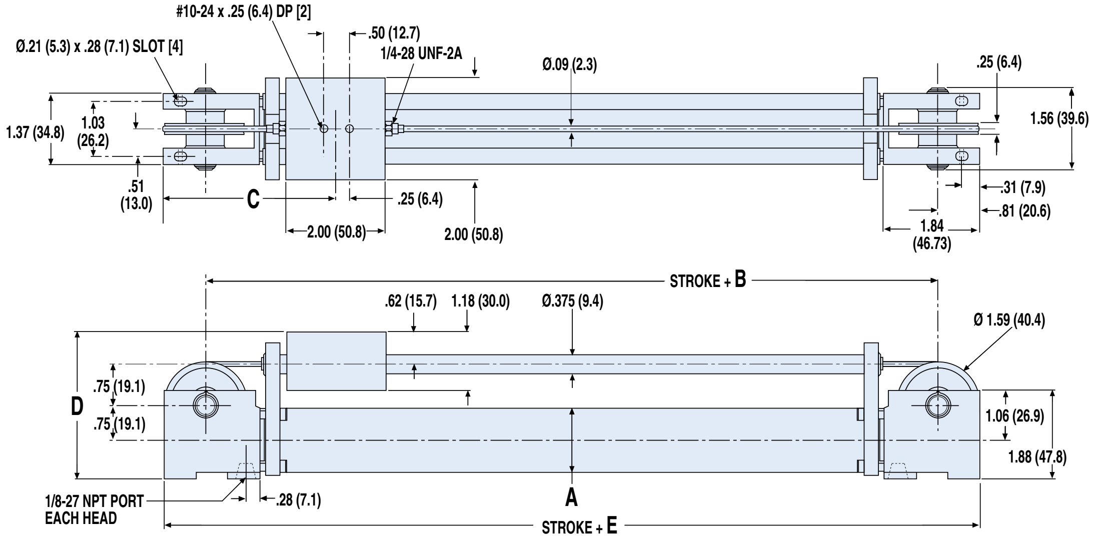

Dimensions in inches, in parentheses ( ) dimensions in millimeters

TC Track Cable Cylinder - TC15

LOAD WEIGHT vs STROKE TC15 (5/8" Dia. Rods at 0.30" Deflection)

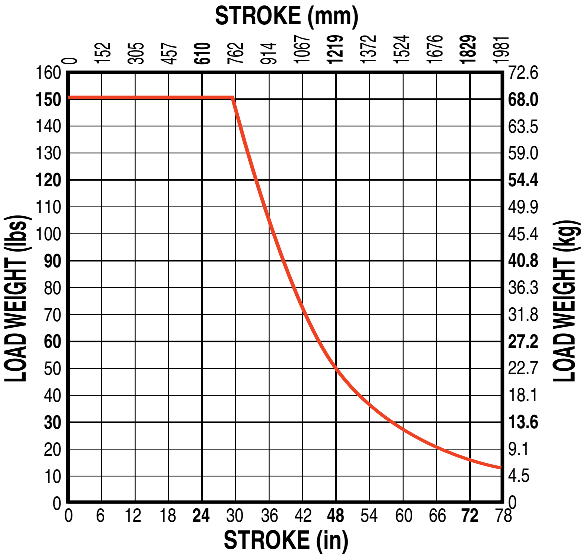

NOTE: Rod deflection must not exceed .30 inches

OVERALL UNIT SPECIFICATIONS		
		TC15
BORE SIZE	in	1.50
MAX STROKE	in	80
	mm	*2032*
MAX PRESSURE	PSI	100
	bar	*6.9*
MAX FORCE OUTPUT	lb	174
	N	*774.0*

NOTE: Additional specifications Page CC_8

LOAD DISTRIBUTION

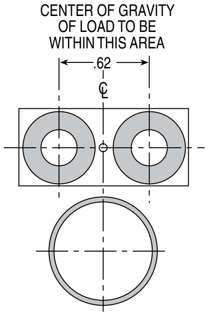

NOTE: Moderate bending moments are acceptable. The moment load must not exceed 190 inch-pounds for the 1-$^1/_2$ bore cylinder.

The diagrams, illustrate how this is calculated.

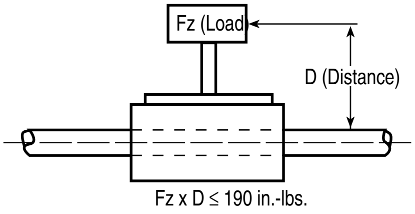

DIMENSIONS

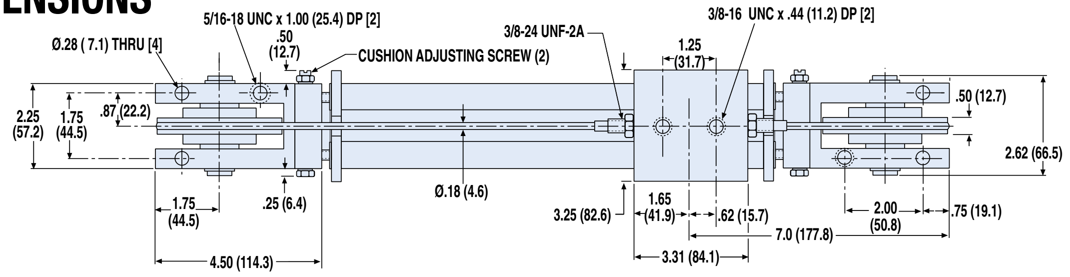

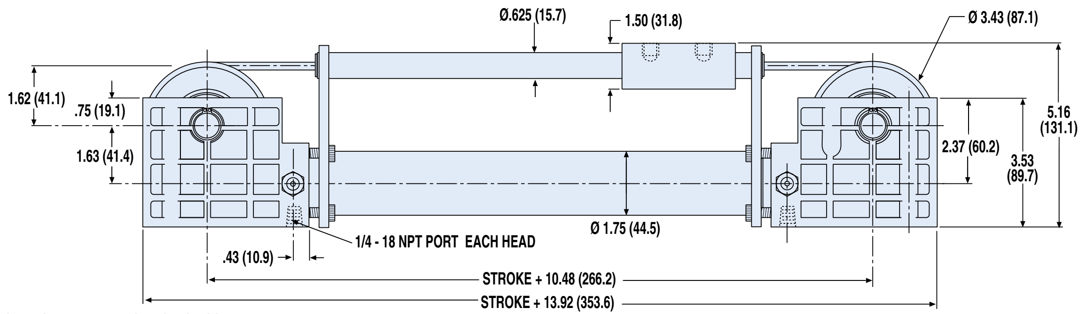

Dimensions in inches, in parentheses ( ) dimensions in millimeters

CC Automatic Tensioner - All Sizes

AUTOMATIC TENSIONER

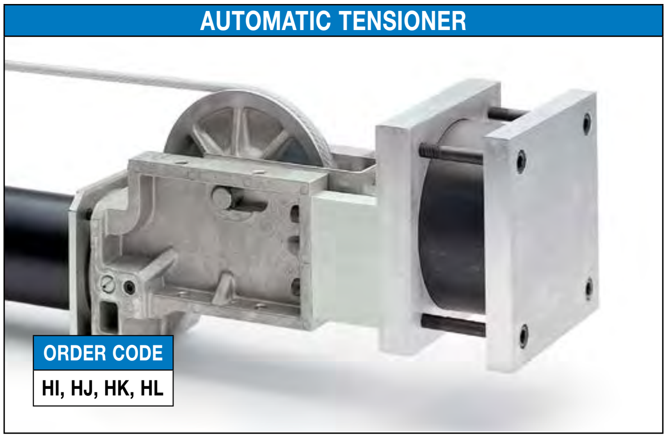

ORDER CODE

HI, HJ, HK, HL

Automatic tensioners are required when a cylinder's stroke length is beyond the maximum stroke length for full manual cable adjustment for that bore size. The AT unit keeps the cable rigid and ensures maximum service life of both the cable and gland seals. AT units are also recommended for vertical lifting or severe, high-cyclic applications.

The standard automatic tensioner unit has a 1-inch stroke, providing 2 inches of cable take-up. A 2-inch stroke AT unit may be installed on a cylinder, providing 4 inches of cable take-up. Refer to the tables below for tensioner stroke options
on available bore sizes.

MAXIMUM STROKE LENGTHS FOR CYLINDERS WITH AUTO TENSIONERS

NOTE: A cable cylinder should be completely proof-loaded and pretensioned with either the Torque Method or the Field Method in order for the auto tensioner to achieve the maximum stroke lengths shown in the table below. (For more information on proof-loading and pretensioning, please see page CC_36)

	STROKE LENGTHS IN INCHES BASED ON CYLINDER'S MAXIMUM OPERATING PRESSURE									
STROKE OPTIONS	**CC05**	**CC07**	**CC10**	**CC15**	**CC20**	**CC25**	**CC30**	**CC40**	**CC50**	**CC52**
Auto Tensioner with one 1" stroke unit	**NA**	**134.4**	**134.4**	**361.2**	**260.4**	**159.6**	**243.6**	**134.4**	**NA**	**266.8**
Auto Tensioner with two 1" stroke units	NA	252.0	252.0	579.6	369.6	266.8	344.4	193.2	NA	327.6
Auto Tensioner with one 2" stroke unit	NA	NA	NA	NA	369.6	266.8	344.4	193.2	468.0	327.6
Auto Tensioner with two 2" stroke units	NA	NA	NA	NA	524.4	322.8	487.2	277.2	714.0	472.8

Above Dimensions in inches

	STROKE LENGTHS IN METERS BASED ON CYLINDER'S MAXIMUM OPERATING PRESSURE									
STROKE OPTIONS	**CC05**	**CC07**	**CC10**	**CC15**	**CC20**	**CC25**	**CC30**	**CC40**	**CC50**	**CC52**
NA 3.41 14.72 6.78	3.41 9.39 8.75	9.17 6.78 4.91	6.61 8.75 11.89	4.05 4.91 8.32	6.19 NA	3.41 8.32NA	NA NA	6.78NA NA	6.40 NA	6.40 9.39
NA NA	NA	NA	13.32	8.20	12.37	7.04	18.14	12.01		

Above Dimensions in METERS

NOTE: Tube couplers are required on cable cylinders with strokes over 280 inches (7.11m).

Maximum stroke lengths in the above table can be extended by using the percentage of the pressure differential between the cylinder's actual operating pressure and the maximum operating pressure.

Example: If the cylinder selected is a CC15 ($1^1/2$-inch bore) with one 1-inch stroke AT unit:

Actual PSI: 80
Max. PSI: 100
Differential: 20%
20% x 361.2 in. (maximum stroke) = 72.24 in.
72.24 in. + 361.2 in. = 433.44 in. (36.12 feet)

All AT units should be plumbed with a separate, regulated non-fluctuating pressure source which is a set percentage of the actual cylinder operating pressure. These are listed in the table at the right.

NOTE: When using an AT unit in an application where the cylinder is loaded in only one direction, it is recommended to have the AT unit located so the load direction of travel is away from the AT unit. On vertical applications, the AT unit should be located on the bottom.

AUTO TENSIONER PRESSURE SETTINGS

FOR MODEL	% OF LOAD PRESSURE

CC Automatic Tensioner - CC07, CC10, CC15, CC20, CC25

DIMENSIONS

AT FOR CC07, CC10

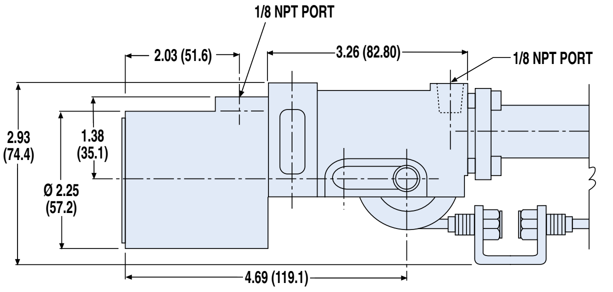

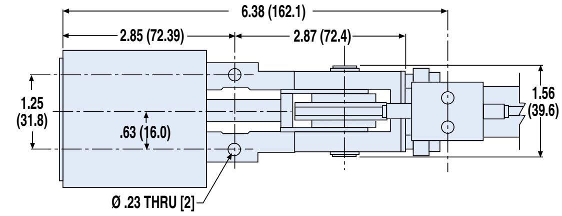

AT FOR CC15

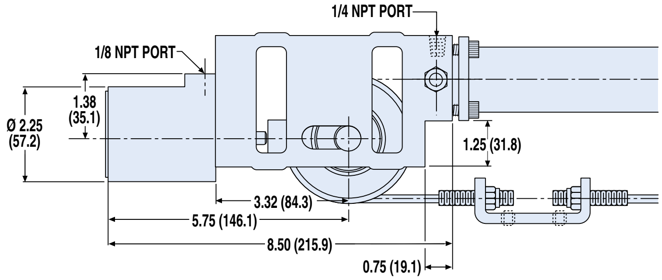

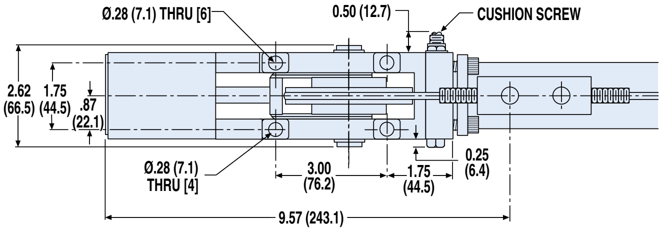

AT FOR CC20, CC25

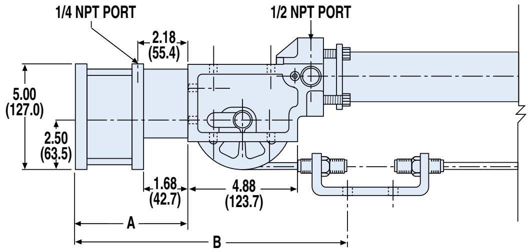

MODEL	A	B
1" Stroke Tensioner	5.66"	12.16"
2" Stroke Tensioner	6.66"	13.16"

MODEL	A	B
1" Stroke Tensioner	143.8mm	308.9mm
2" Stroke Tensioner	169.2mm	334.3mm

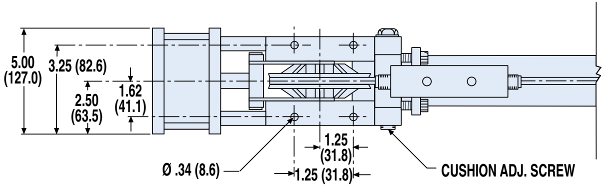

Dimensions in inches, in parentheses ( ) dimensions in millimeters

SPACE AND WEIGHT REQUIREMENTS		
MODEL	DEAD LENGTH (in)*	WEIGHT (lbs)
CC07	8.87	1.06
CC10	8.87	1.06
CC15	16.41	2.76
CC20	20.66	8.41
CC25	20.66	8.41

*Add dead length to stroke length to determine overall cylinder length

SPACE AND WEIGHT REQUIREMENTS		
MODEL	DEAD LENGTH (mm)*	WEIGHT (kg)
CC07	225	0.48
CC10	225	0.48
CC15	417	1.25
CC20	525	3.81
CC25	525	3.81

CC Automatic Tensioner - CC30, CC40, CC52, CC50

DIMENSIONS

AT FOR CC30, CC40, CC52

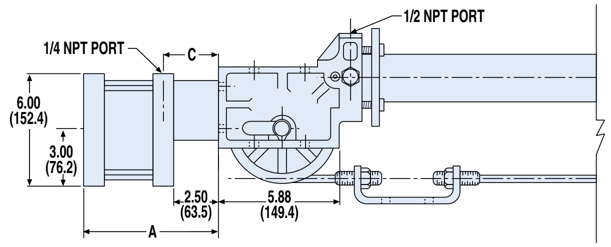

MODEL	A	B	C
1" Stroke Tensioner	6.38"	14.12"	3.01"
2" Stroke Tensioner	7.38"	15.12"	3.50"

MODEL	A	B	C
1" Stroke Tensioner	162.1mm	358.6mm	76.5mm
2" Stroke Tensioner	187.5mm	384.0mm	88.9mm

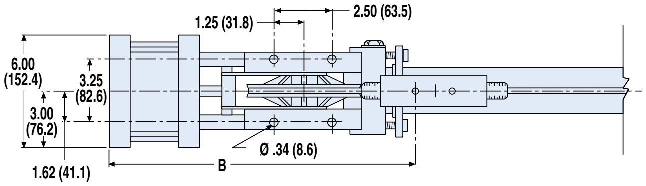

AT FOR CC50

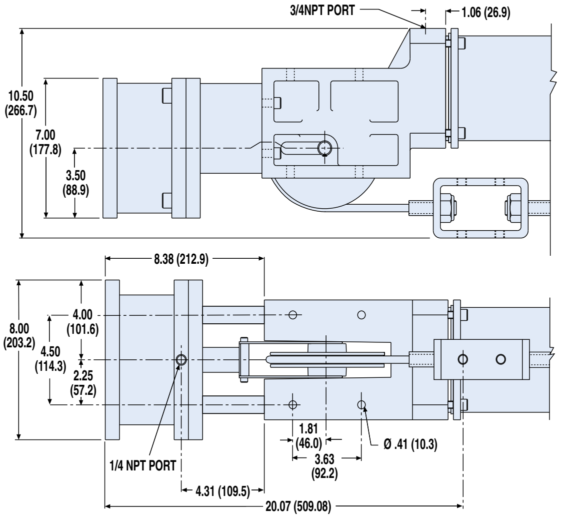

Dimensions in inches, in parentheses ( ) dimensions in millimeters

SPACE AND WEIGHT REQUIREMENTS		
MODEL	DEAD LENGTH (in)*	WEIGHT (lbs)
CC30	23.88	14.36
CC40	24.88	14.36
CC52	23.88	14.36
CC50	33.75	23.68

*Add dead length to stroke length to determine overall cylinder length

SPACE AND WEIGHT REQUIREMENTS		
MODEL	DEAD LENGTH (mm)*	WEIGHT (kg)
CC30	607	6.51
CC40	632	6.51
CC52	607	6.51
CC50	857	10.74

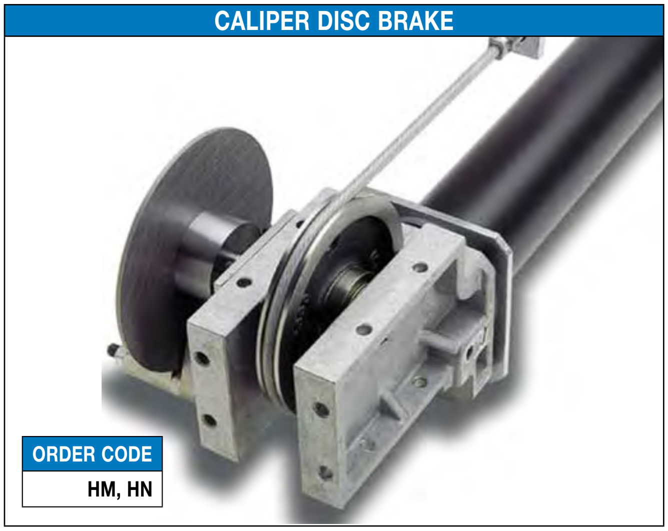

Caliper disc brakes can be used to add holding force in horizontal applications and aid in deceleration at the end of stroke. Caliper disc brakes must be used with an automatic tensioner to function properly. See page CC_32 for selection information and braking formulae.

NOTE: Tolomatic's H20DARC is used on all available models. See part numbers below:

	CC15	**CC20**	**CC25**	**CC30**	**CC40**	**CC52**
Brake Number	0728-0010	0728-0010	0728-0010	0728-0010	0728-0010	0728-0010
Disc & Hub No.	0801-0008	0801-0010	0801-0010	0801-0010	0801-0010	0801-0010

See catalog 9900-4009 for detailed information on brakes and discs.

DYNAMIC TORQUE
H-20 BRAKE with 6-5⁄16" DISC
(FOR CC15, CC20, CC25, CC30, CC40, CC52)

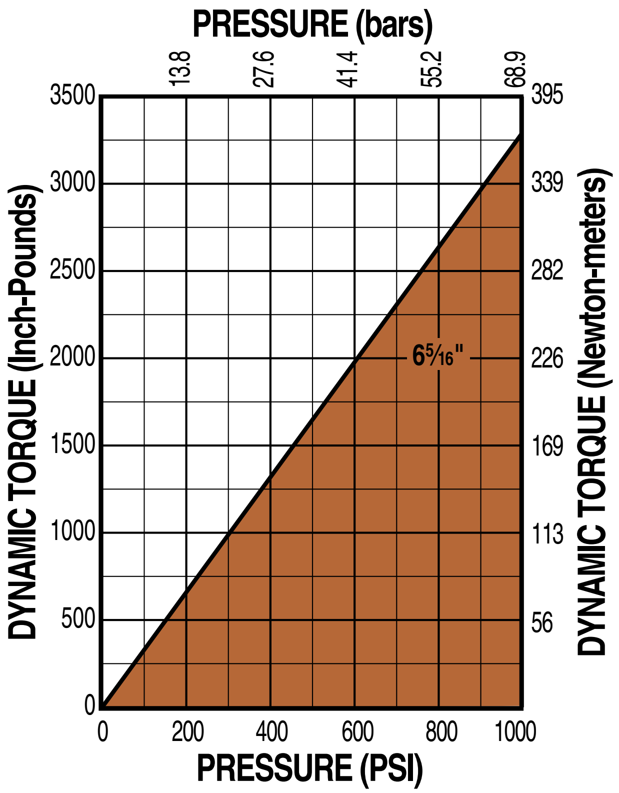

STATIC TORQUE
H-20 BRAKE with 6-5⁄16" DISC
(FOR CC15, CC20, CC25, CC30, CC40, CC52)

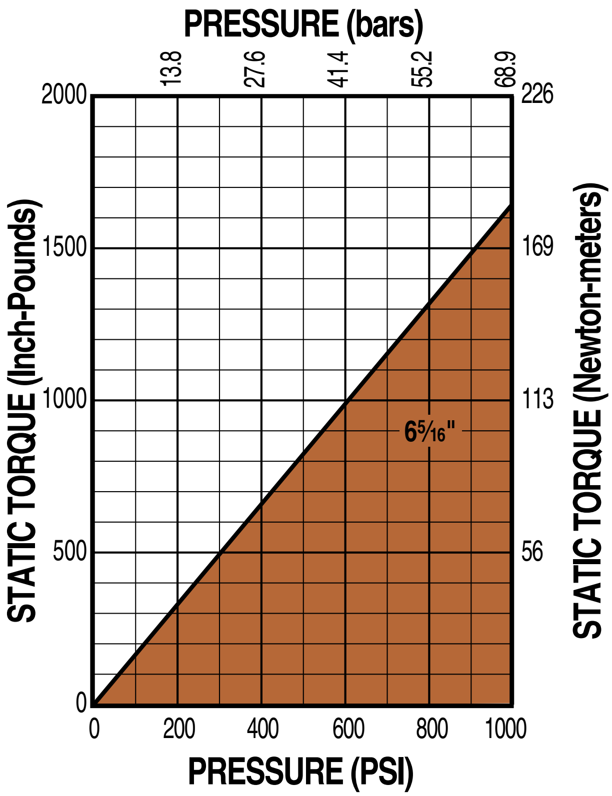

CC Cylinder/Brake Combinations - CC15, CC20, CC25

DIMENSIONS

CYLINDER/ BRAKE COMBINATION FOR CC15

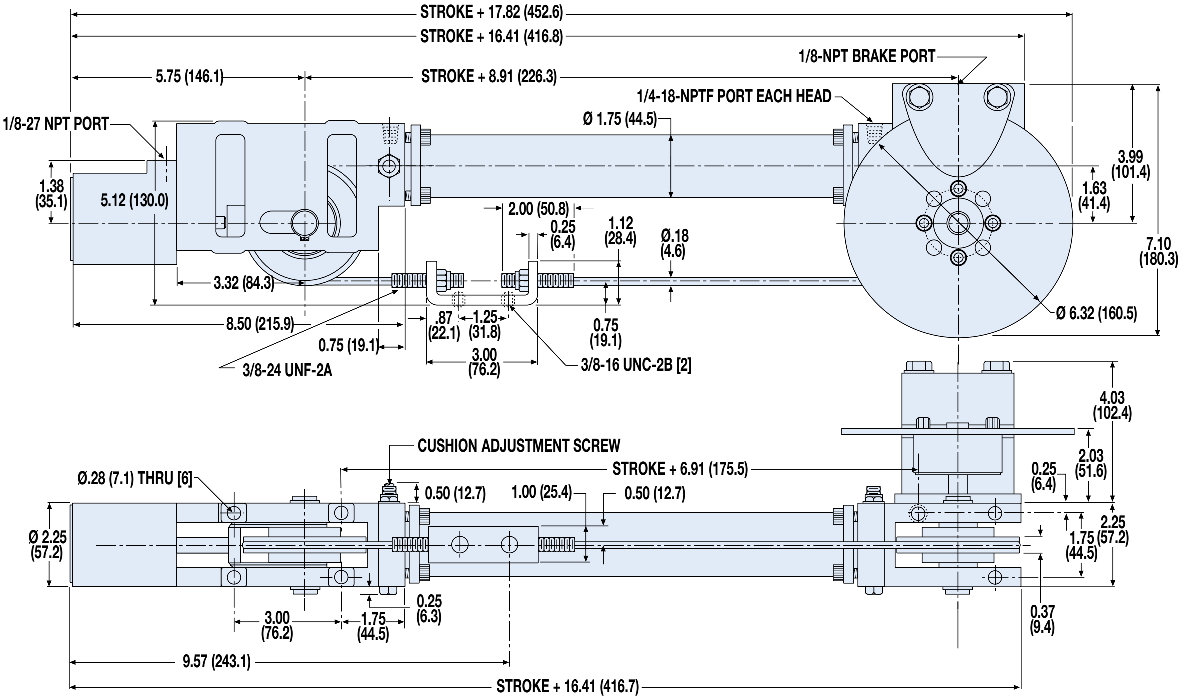

CYLINDER/ BRAKE COMBINATION FOR CC20, CC25

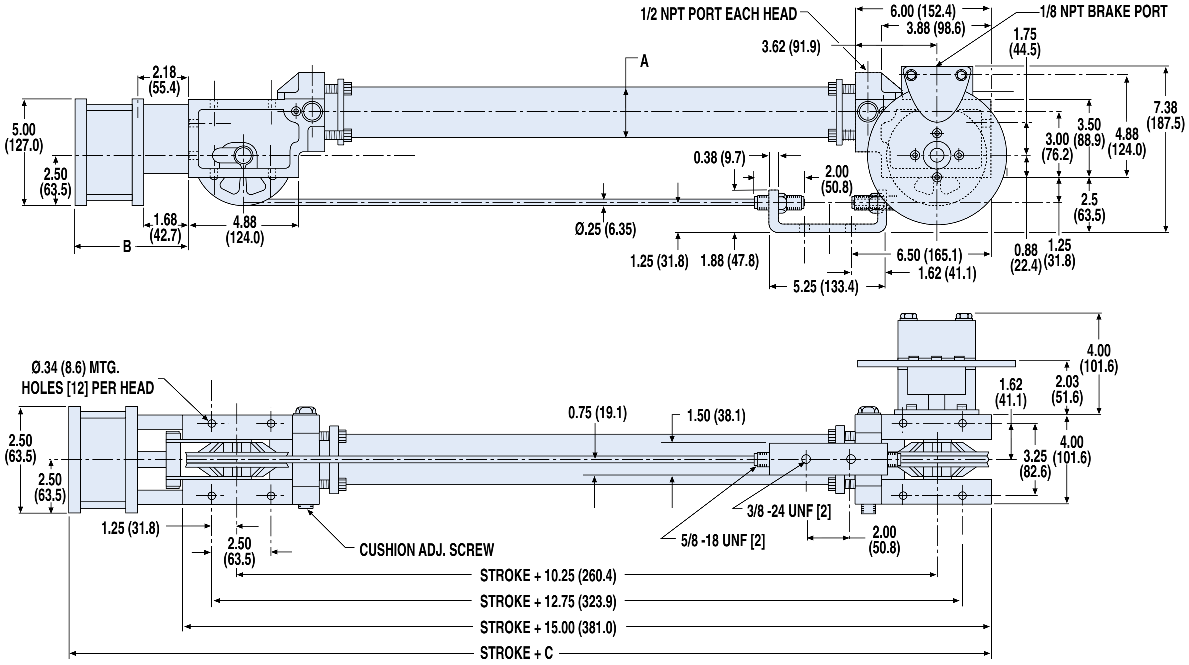

MODEL	A	B	C
CC20 w/ 1" Stroke Tensioner	Ø 2.25"	5.66"	20.66"
CC20 w/ 2" Stroke Tensioner	Ø 2.25"	6.66"	22.15"
CC25 w/ 1" Stroke Tensioner	Ø 2.75"	5.66"	20.66"
CC25 w/ 2" Stroke Tensioner	Ø 2.75"	6.66"	22.15"

MODEL	A	B	C
CC20 w/ 1" Stroke Tensioner	Ø 57.2mm	143.8mm	524.7mm
CC20 w/ 2" Stroke Tensioner	Ø 57.2mm	169.2mm	561.6mm
CC25 w/ 1" Stroke Tensioner	Ø 69.9mm	143.8mm	524.7mm
CC25 w/ 2" Stroke Tensioner	Ø 69.9mm	169.2mm	561.6mm

Dimensions in inches, in parentheses ( ) dimensions in millimeters

DIMENSIONS

CYLINDER/ BRAKE COMBINATION FOR CC30, CC40, CC52

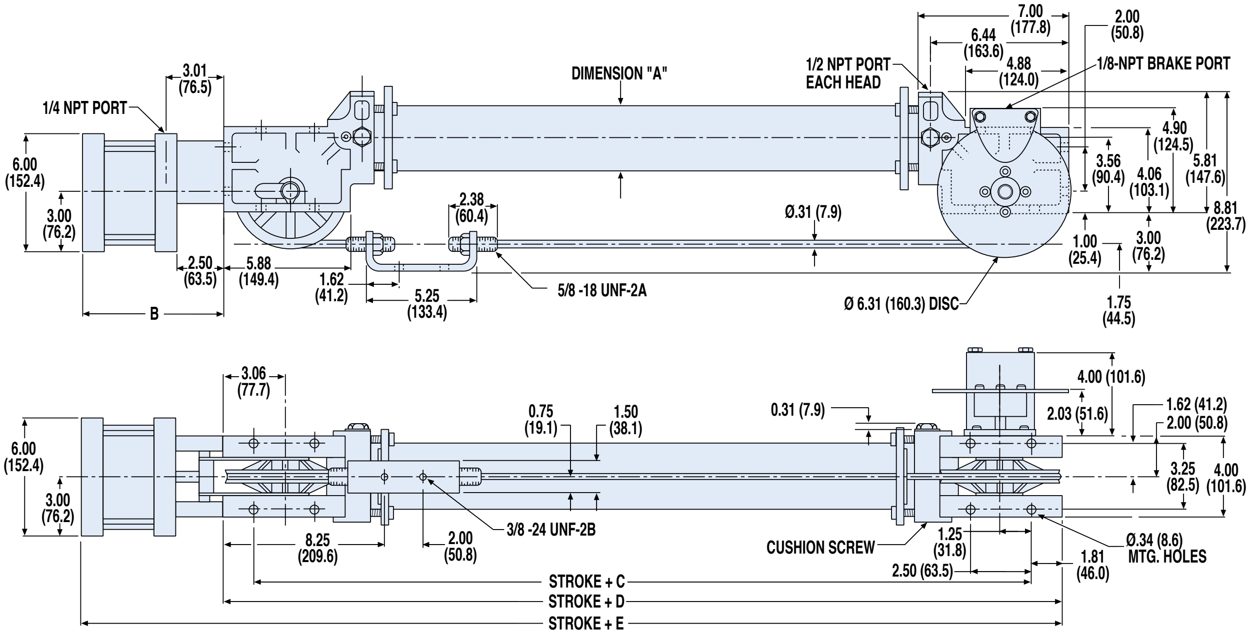

MODEL	A	B	C	D	E
CC30 w/ 1" Stroke Tensioner	Ø 3.25"	6.38"	13.87"	17.50"	23.89"
CC30 w/ 2" Stroke Tensioner	Ø 3.25"	7.38"	13.87"	17.50"	24.89"
CC40 w/ 1" Stroke Tensioner	Ø 4.25"	6.38"	14.87"	18.50"	24.89"
CC40 w/ 2" Stroke Tensioner	Ø 4.25"	7.38"	14.87"	18.50"	25.88"
CC52 w/ 1" Stroke Tensioner	Ø 2.25"	6.38"	13.87"	17.50"	23.89"
CC52 w/ 2" Stroke Tensioner	Ø 2.25"	7.38"	13.87"	17.50"	24.09"

MODEL	A	B	C	D	E
CC30 w/ 1" Stroke Tensioner	Ø 82.6mm	162.1mm	352.3mm	444.5mm	609.1mm
CC30 w/ 2" Stroke Tensioner	Ø 82.6mm	187.5mm	352.3mm	444.5mm	634.5mm
CC40 w/ 1" Stroke Tensioner	Ø 108.0mm	162.1mm	357.4mm	469.9mm	634.5mm
CC40 w/ 2" Stroke Tensioner	Ø 108.0mm	187.5mm	357.4mm	469.9mm	634.5mm
CC52 w/ 1" Stroke Tensioner	Ø 57.2mm	162.1mm	352.3mm	444.5mm	609.1mm
CC52 w/ 2" Stroke Tensioner	Ø 57.2mm	187.5mm	352.3mm	444.5mm	634.5mm

Dimensions in inches, in parentheses ( ) dimensions in millimeters

CC, SA, DP, TC Switches - All Sizes

SWITCHES

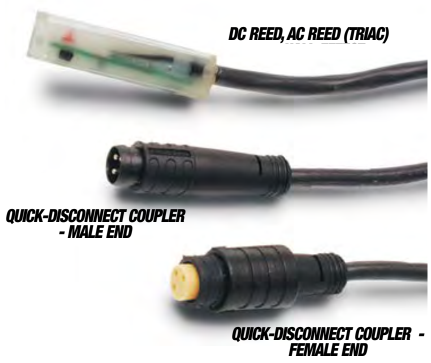

There are 10 sensing choices: DC reed, form A (open) or form C (open or closed); AC reed (Triac, open); each with either flying leads or QD (quick disconnect). Commonly used to send analog signals to PLC (programmable logic controllers), TLL, CMOS circuit or other controller device. These switches are activated by the actuator's magnet.

Switches contain reverse polarity protection. QD cables are shielded; shield should be terminated at flying lead end.

If necessary to remove factory installed switches, be sure to reinstall on the same of side of actuator with scored face of switch toward internal magnet.

SPECIFICATIONS

	REED DC				REED AC	
ORDER CODE	RT	RM	BT	BM	CT	CM
LEAD	5m	QD*	5m	QD*	5m	QD*
CABLE SHIELDING	Unshielded	Shielded†	Unshielded	Shielded†	Unshielded	Shielded†
SWITCHING LOGIC	"A" Normally Open		"C" Normally Open or Closed		Triac Normally Open	
MECHANICAL CONTACTS	Single-Pole Single-Throw		Single-Pole Double-Throw		Single-Pole Single-Throw	
COIL DIRECT	Yes		Yes		Yes	
POWER LED	None		None		None	
SIGNAL LED	Red					
OPERATING VOLTAGE	200 Vdc max.		120 Vdc max.		120 Vac max.	
OUTPUT RATING	—				—	
OPERATING TIME	0.6 msec max. (including bounce)		0.7 msec max. (including bounce)		—	
OPERATING TEMPERATURE	-40°F [-40°C] to 158°F [70°C]					
RELEASE TIME	1.0 msec. max.				—	
ON TRIP POINT	—				—	
OFF TRIP POINT	—				—	
**POWER RATING (WATTS)	10.0 §		3.0 §§		10.0	
VOLTAGE DROP	2.6 V typical at 100 mA		NA		—	
RESISTANCE	0.1 Ω Initial (Max.)				—	
CURRENT CONSUMPTION	—				1 Amp at 86°F [30°C]	0.5 Amp at 140°F [60°C]
FREQUENCY	—				47 - 63 Hz	
CABLE MIN. BEND RADIUS STATIC	0.630" *[16mm]*					
DYNAMIC	Not Recommended					

CAUTION: DO NOT OVER TIGHTEN SWITCH HARDWARE WHEN INSTALLING!

** **WARNING**: Do not exceed power rating (Watt = Voltage X Amperage). Permanent damage to sensor will occur.

*QD = Quick Disconnect; Male coupler is located 6" [152mm} from sensor,
Female coupler to flying lead (part #2503-1025) distance is 197" [5m] also see Cable Shielding specification above

REPLACEMENT OF QD SWITCHES MANUFACTURED BEFORE JULY 1, 1997: It will be necessary to replace or rewire the female end coupler.

CURRENT
Quick disconnect
Wiring

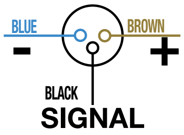

OLD
Quick disconnect
Wiring

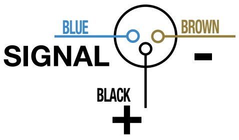

Reed Switch Life Expectancy: Up to 200,000,000 cycles (depending on load current, duty cycle and environmental conditions)

†Shielded from the female quick disconnect coupler to the flying leads. Shield should be terminated at flying lead end.

§ Maximum current 500mA (not to exceed 10VA) Refer to Temperature vs. Current graph and Voltage Derating graph

§§ Maximum current 250mA (not to exceed 3VA) Refer to Temperature vs. Current graph and Voltage Derating graph

CC, SA, DP, TC Switches - All Sizes

PERFORMANCE

TEMP. vs CURRENT, DC REED

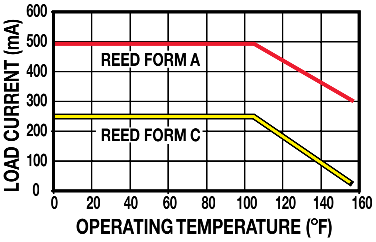

TEMP. vs CURRENT, AC REED

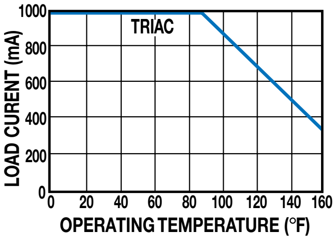

VOLTAGE DERATING, DC REED

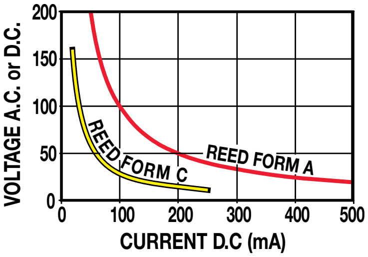

WIRING DIAGRAMS

RT & RM DC REED, FORM A

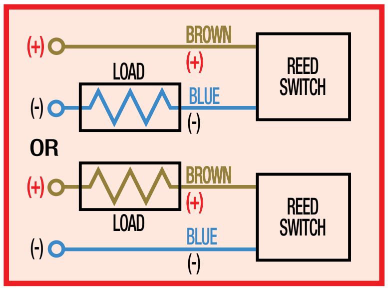

CT & CM AC REED, TRIAC

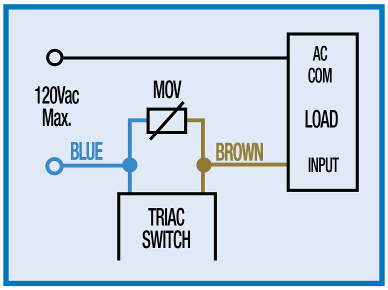

BT & BM DC REED, FORM C

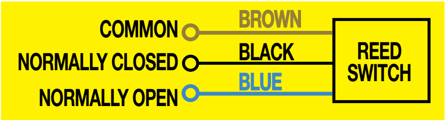

INSTALLATION INFORMATION

⚠

THE NOTCHED FACE OF THE SWITCH INDICATES THE SENSING SURFACE AND MUST FACE TOWARD THE MAGNET.

DIMENSIONS

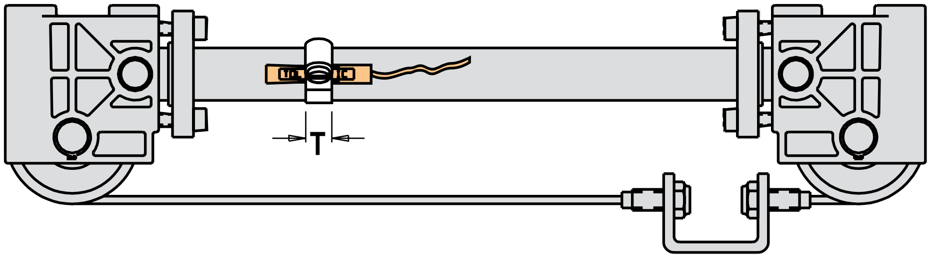

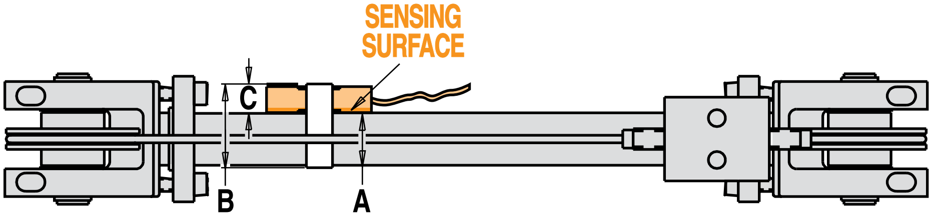

MODEL	BORE	A*	B	C	T
CCM05	0.50	0.81	1.09	0.35	0.31
CCM07	0.75	0.81	1.09	0.35	0.31
CCM10	1.00	1.12	1.65	0.35	0.31
CCM15	1.50	1.56	2.15	0.35	0.31
CCM20	2.00	2.08	2.65	0.35	0.31
CCM52	2.00	2.08	2.65	0.35	0.31
CCM25	2.50	2.75	3.15	0.35	0.31
CCM30	3.00	3.25	3.65	0.35	0.31
CCM40	4.00	4.25	4.65	0.35	0.56
CCM50	5.00	5.25	5.65	0.35	0.56

Above dimensions in inches
*Inside Dimension ±.06"

MODEL	BORE	A*	B	C	T
CCM05	0.50"	20.57	27.69	8.76	7.87
CCM07	0.75"	20.57	27.69	8.76	7.87
CCM10	1.00"	28.45	41.91	8.76	7.87
CCM15	1.50"	39.62	54.61	8.76	7.87
CCM20	2.00"	52.83	67.31	8.76	7.87
CCM52	2.00"	52.83	67.31	8.76	7.87
CCM25	2.50"	69.85	80.01	8.76	7.87
CCM30	3.00"	82.55	92.71	8.76	7.87
CCM40	4.00"	107.95	118.11	8.76	14.22
CCM50	5.00"	133.35	143.51	8.76	14.22

Above dimensions in millimeters
*Inside Dimension ±1.5mm

NOTE: HALL-EFFECT SWITCHES ARE NOT AVAILABLE FOR CABLE CYLINDERS
SWITCHES ARE NOT AVAILABLE FOR CABLE CYLINDERS WITH STEEL TUBE
DEAD LENGTH WILL INCREASE ON MOST MODELS, SEE BELOW

	MODEL	CCM05	CCM07 SAM07	CCM10 SAM10	CCM15 SAM15	CCM20 SAM20	CCM52 SAM52	CCM25 SAM25	CCM30 SAM30	CCM40 SAM40	CCM50
	BORE	0.50"	0.75"	1.00"	1.50"	2.00"	2.00"	2.50"	3.00"	4.00"	5.00"
SPACE REQUIREMENTS - ADD DEAD LENGTH TO STROKE LENGTH	IN.	1.62	1.62	1.62	0.375	0.375	0.375	0.375	0.375	0.375	0
	MM	41.2	41.2	41.2	9.5	9.5	9.5	9.5	9.5	9.5	0

CC: Cable Cylinder Selection Guidelines - All Sizes

EXTERNAL LOAD GUIDANCE AND SUPPORT

The process of selecting a cable cylinder for a given application can be complex. It is highly recommended that you contact Tolomatic or a Tolomatic Distributor for assistance in selecting the best actuator for your application. The following overview of the selection guidelines are for educational purposes only.

1 COMPILE APPLICATION REQUIREMENTS

To determine the appropriate Cable Cylinder for an application, compile the following information:

- Available pressure (PSI)
- Weight of load (lbs. or kgs.)
- Orientation of load (lbs. or kgs.)
- Velocity of load (in./sec. or mm/sec.)
- Stroke length (in. or mm)

2 SELECT CYLINDER SIZE

- Consult the Theoretical Force vs. Pressure charts.
- Cross-reference the load force (or load weight if force is not known) and the available operating pressure. If the intersection falls below the diagonal line, and if moments do not exceed maximum values listed for that model (see Step 3), the actuator will accommodate the application. If the intersection is above the diagonal line, a larger cylinder bore size should be considered.

NOTE: Additional force may be required to obtain the necessary acceleration for vertical or horizontal loads.

3 DETERMINE INTERNAL CUSHION CAPACITY

- Consult the Cushion Data chart for the model selected. The velocities listed on the cushion charts are final or cushion impact velocities. On applications where the internal cushions or bumpers are to be used, be sure the actual, final or impact velocity is known. If the velocity is not known, use of limit switches with valve deceleration circuits or shock absorbers should be considered. Cross-reference the final velocity and weight of the load. If the intersection is below the diagonal lines, the internal cushions on the actuator may be used. If the point falls above the dashed diagonal line or if the velocity is not known, use deceleration circuits, external shock absorbers or select a larger cylinder with greater cushion capacity. On high-cyclic applications, use of external stops is strongly recommended.

NOTE: The 1/2-inch and 5-inch cable cylinders and all sizes of magnetically coupled cylinders do not have internal cushions.

The 1/2-inch cable cylinder can handle only very light inertial loads (5 pounds or less). Heavier loads require external stops or shock absorbers.

4 DETERMINE THE MAXIMUM STROKE LENGTHS FOR FULL MANUAL CABLE ADJUSTMENT (CC ONLY)

Once you have selected the proper bore size for your application and determined the cylinder's cushion capacity, you need to determine the physical stroke length limitation of the cylinder. Refer to the table below to find the bore size selected and its maximum stroke length.

NOTE: Maximum recommended stroke length for full manual cable adjustment is the maximum stroke length at which the cables can be properly proof-loaded, pretensioned and maintained at the required tension by manually adjusting the clevis terminal lock nuts. Maximum stroke length is based on the cylinder's maximum pressure rating.

If the stroke length for your application falls within the maximum stroke length for full manual cable adjustment, your model selection is complete. (Refer to graph on page CC_31.)

IMPORTANT NOTE: Once a cylinder is installed in an application, but before putting it into service, the cables must be proof-loaded and pretensioned for proper operation. Refer to Application Guidelines on page CC_36 for proof-loading and pretensioning methods.

If your stroke length is beyond the maximum stroke lengths shown, you have two options available.

1. Increase the maximum stroke length of the selected cylinder size by the percentage of the pressure differential between the cylinder's actual operating pressure and the cylinder's maximum rated operating pressure.

Example: If the cylinder selected is a CC15 (1½ - inch bore):

Actual PSI:	**80**
Max. PSI:	**100**
Differential:	**20%**

20% x 126 in. (maximum stroke) = 25.2 in.

25.2 + 126 = 151.2 in. (12.6 feet)

2. If your required stroke length is still more than the increased stroke length determined from option "1.", an automatic tensioner (AT) or multiple tensioners may be required.

For maximum stroke lengths when using auto tensioners, refer to the chart on page CC_22.

NOTE: When using auto tensioners, the cylinder's cables must be proof-loaded and pretensioned before pressure is applied to the AT unit. Refer to Application Guidelines on page CC_36 for proper proof-loading and pretensioning methods.

Auto tensioners are strongly recommended for vertical lifting applications and severe, high-cyclic applications even when the cylinder's stroke is within the maximum stroke length at full manual cable adjustment.

5 CONSIDER OPTIONS

Avialable options for cable cylinders include:

- Auto Tensioner
- Caliper Disc Brake
- Switches (DC Reed & Triac)
- Steel Tube *(Switches NOT available)*
- Seals of Viton® Material
- 3 Ported Heads

CC: Cable Cylinder Selection Example

The procedure for selection of cable cylinder and magnetically coupled cylinder are very similar. For illustrative purposes, charts for the CC10 model are used in this example.

1 COMPILE APPLICATION REQUIREMENTS

• Available pressure	80 psi
• Weight of load	30 lbs.
• Orientation of load	horiz.
• Final velocity* of load	10"per sec
• Stroke length	68"

*2x average velocity, see page CC_38

2 SELECT CYLINDER SIZE

- Consult the Theoretical Force vs. Pressure charts.
- Cross-reference the load force and the available operating pressure. In this example a CC07 would accommodate this load at the available PSI.

THEORETICAL FORCE vs PRESSURE

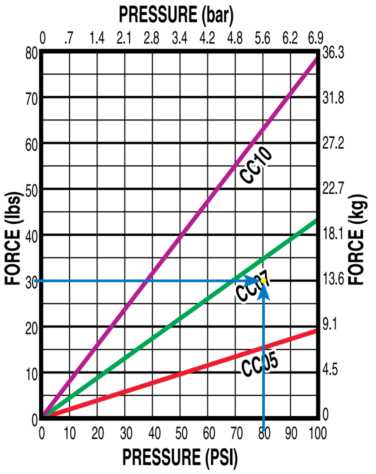

3 DETERMINE INTERNAL CUSHION CAPACITY

- Consult the Cushion Data Chart for the model selected.

In this example the calculated value for the final velocity and the load intersect at the line for the internal cushions capacity. Thus the CC10 will work for this application.

CUSHION DATA

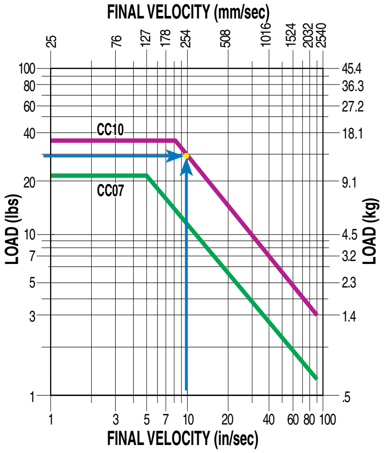

4 DETERMINE THE MAXIMUM STROKE LENGTHS FOR FULL MANUAL CABLE ADJUSTMENT (CC ONLY)

- Consult the chart at right.

In our example we are using 80 PSI, the chart indicates a maximum of 100 PSI, so we can calculate the maximum stroke length with manual adjustment:

1.20 x 20.4" = 24.48"

Our stroke length is 68" so it will require the automatic tensioner option.

5 CONSIDER OPTIONS

This application will use Form C dc Reed switches to signal other units in this automated system.

The final configurated string will appear as follows:

CCM10SK68.000HIBM2

CC MAXIMUM STROKE LENGTHS

For Full Manual Cable Adjustment

	BORE	MAX PRESSURE		MAX STROKE	
	in	PSI	*bar*	in	*mm*
CC05	0.50	100	*6.89*	20.40	*518.2*
CC07	0.75	100	*6.89*	20.40	*518.2*
CC10	1.00	100	*6.89*	20.40	*518.2*
CC15	1.50	100	*6.89*	126.00	*3200.4*
CC20	2.00	200	*13.79*	159.60	*4053.8*
CC25	2.50	200	*13.79*	100.80	*2560.3*
CC30	3.00	200	*13.79*	151.20	*3840.5*
CC40	4.00	100	*6.89*	84.00	*2133.6*
CC50	5.00	100	*6.89*	222.00	*5638.8*
CC52	2.00	500	*34.47*	134.40	*3413.8*

CC: Caliper Disc Brake for Cable Cylinder Selection Guidelines

CALIPER DISC BRAKE

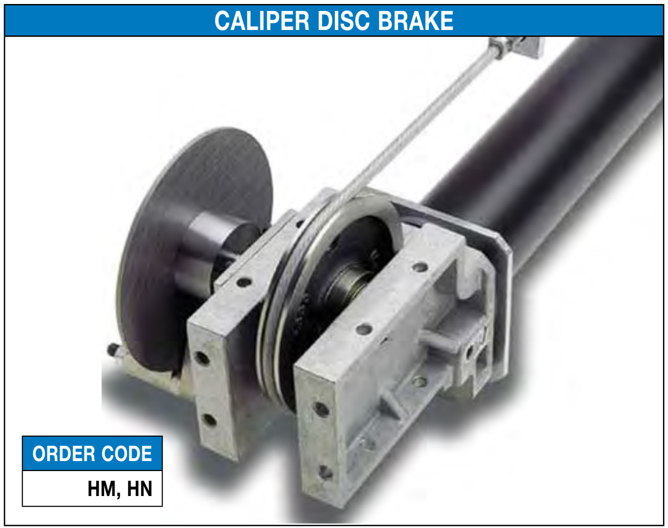

ORDER CODE

HM, HN

DETERMINE THE LOAD CONFIGURATION AND THE HOLDING CAPACITY OF THE BRAKE

The following steps will help determine the adequate stopping time and distance for the cable cylinder equipped with a caliper disc brake under various conditions and loads.

1. Select the bore size of the cable cylinder based on load to be moved. Determine load pressure. Set regulator at 25% above load pressure (P_c).

2. Calculate the unbalanced cylinder force (F_c) **only** if pressure is applied when braking. If pressure is removed prior to braking, go on to 3.

$$F_c = P_c \times A_c$$

3. Calculate the tangential braking force required. This is (F_{tr}) when pressure is removed prior to braking, or (F_{ta}) when pressure is still applied when braking. Refer to illustrations in Figure 1.

Carefully note conditions:

$$F_{tr} = W\left[\left(\frac{a}{g} - \text{Sin}\vartheta\right) - (f \cos\vartheta)\right], \text{ Horizontal or Load rising}$$

$$F_{tr} = W\left[\left(\frac{a}{g} + \text{Sin}\vartheta\right) - (f \cos\vartheta)\right], \text{ Load falling}$$

$$F_{ta} = F_c + W\left(\frac{a}{g} - f\right), \text{ Horizontal loads}$$

$$= F_c + W\left[\left(\frac{a}{g} - \text{Sin}\vartheta\right) - (f \cos\vartheta)\right], \text{ Incline load rising}$$

$$= F_c + W\left(\frac{a}{g} - 1\right), \text{ Vertical load rising}$$

In the above expressions (a) can be calculated from:

$$a = \frac{V^2}{2S} \text{ or } \frac{V}{T}, \text{ In./Sec.}^2$$

4. Calculate the tension required in brake side cable at the time of braking.

$$L_{tr} = \frac{F_{tr}}{0.369}, \text{ lbs.; Pressure removed while braking}$$

$$L_{ta} = \frac{F_{ta}}{0.369}, \text{ lbs.; Pressure applied while braking}$$

NOMENCLATURE

a = Deceleration, in/sec^2

g = Deceleration due to gravity = 386.4 in/sec^2

f* = Coefficient of friction of sliding load

f_c = Coefficient of friction between cable and sheave

F_c = Unbalanced cylinder force, lbs.

F_{ta} = Tangential braking force required with pressure still applied when braking, lbs.

F_{tr} = Tangential braking force required with pressure removed prior to braking, lbs.

L_{tr} = Tension in cable of brake side half while braking with pressure removed, lbs.

L_{ta} = Tension in cable of brake side half while braking with pressure applied, lbs.

L_{trm} = Maximum tension in cable with pressure removed while braking, lbs.

L_{tam} = Maximum tension in cable with pressure applied while braking, lbs.

S = Stopping distance, inches

T = Stopping time, seconds

V = Velocity of load, in/sec.

W = Weight of load, lbs.

W_e = Equivalent Load, lbs.

$W_e = W(\text{Sin}\,\vartheta + f\cos\vartheta)$

ϑ = Angle of inclination

$\left(\begin{array}{l}\theta = 0° \text{ for horizontal} \\ \theta = 90° \text{ for vertical}\end{array}\right)$

R_s = Root radius of sheave groove, inches

P_c = Load Pressure, PSI

A_c = Area of cable cylinder bore, in^2

P_t = Load Pressure, PSI

A_t = Area of tensioner cylinder, in^2

P_{ba} = Brake pressure setting. Pressure applied while braking, PSI

P_{br} = Brake pressure setting. Pressure removed while braking, PSI

**Customer must precisely determine coefficient of friction (f), if this value is used.*

CC: Caliper Disc Brake for Cable Cylinder Selection Guidelines

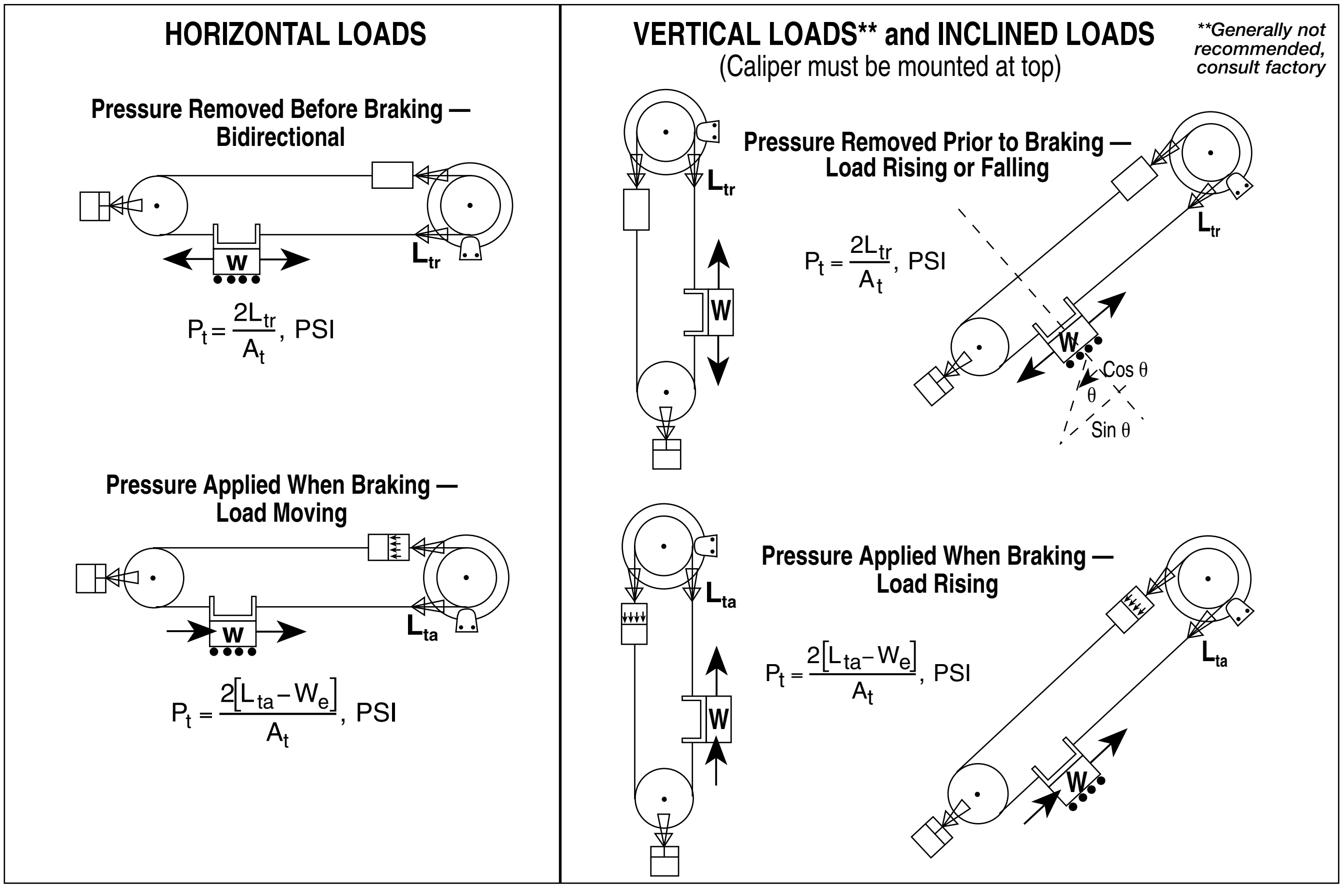

Figure 1

5. Calculate tensioner pressure setting, (P_t) based on type of load configuration. See Figure 1 and Table 1

6. Calculate maximum tension in the cable with **pressure removed** prior to braking (L_{trm}) or with **pressure applied** when braking (L_{tam}).

Horizontal Loads:

$L_{trm} = L_{tr} + W_e$, lbs.; Pressure removed prior to braking bidirectional

$L_{tam} = L_{ta}$, lbs.; Pressure applied when braking and load moving toward caliper

$L_{tam} = L_{ta} + 2W_e$, lbs.; Pressure applied when braking and load moving away from caliper.

Vertical or Inclined Loads:

$L_{trm} = L_{tr} + W_e$, lbs.; Pressure removed prior to braking and load rising or falling

$L_{tam} = L_{ta}$, lbs.; Pressure still applied when braking and load rising

7. Carefully check that (L_{trm}) or (L_{tam}) does not exceed 60% of the cable tensile strength*. If they exceed the 60% figure, either stopping time or stopping distance has to be increased. Repeat steps 1- 7.

8. Calculate the brake operating pressure. See Table 1

$P_{br} = .113\left[L_{tr}R_s\right]$, PSI; Pressure removed prior to braking

$P_{ba} = .113\left[L_{ta}R_s\right]$, PSI; Pressure still applied when braking

9. If pressure is removed prior to braking, check to see if brake can hold the load if application is either vertical or inclined.

The brake can hold the load if:

$.369\ L_{tr} \geq W_e$

*Refer to Cable Specifications in the double-acting cable cylinder section of this catalog for cable tensile strengths.

Table 1

	A_t; in^2	R_s; in.	A_c; in^2
CC07	2.30		
CC10	2.30		
CC15	2.30	1.531	1.767
CC20	11.96	2.00	3.142
CC25	11.96	2.00	4.909
CC30	16.20	2.50	7.069
CC40	16.20	2.50	12.566
CC52	16.20	2.50	3.142
CC50	27.05		

Application Data Worksheet

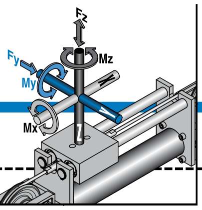

STROKE LENGTH ______________

☐ inch (SK) ☐ millimeters
(U.S. Standard) (Metric)

AVAILABLE AIR PRESSURE _____

☐ PSI ☐ bar
(U.S. Standard) (Metric)

REQUIRED THRUST FORCE _____

☐ lbf ☐ N
(U.S. Standard) (Metric)

LOAD ______________________

☐ lb ☐ kg
(U.S. Standard) (Metric)

LOAD CENTER OF GRAVITY DISTANCE TO CARRIER CENTER

d_x _______
d_y _______
d_z _______

☐ inch ☐ millimeters
(U.S. Standard) (Metric)

FORCES APPLIED TO CARRIER

F_z _______
F_y _______

☐ lbf ☐ N
(U.S. Standard) (Metric)

BENDING MOMENTS APPLIED TO CARRIER

M_x _______
M_y _______
M_z _______

☐ in-lbs ☐ N-m
(U.S. Standard) (Metric)

FINAL VELOCITY ______________

☐ in/sec ☐ mm/sec
(U.S. Standard) (Metric)

MOVE TIME sec. ______________

NO. OF CYCLES ______________

☐ per minute ☐ per hour

ORIENTATION

☐ Horizontal

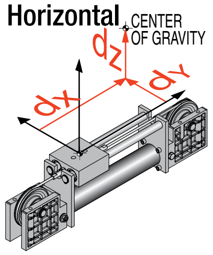

☐ Side

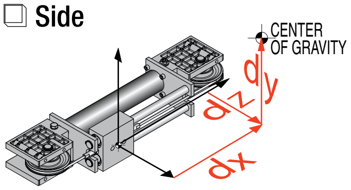

☐ Horizontal Down

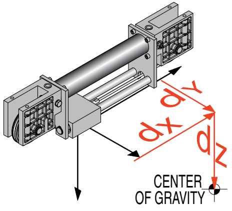

☐ Vertical

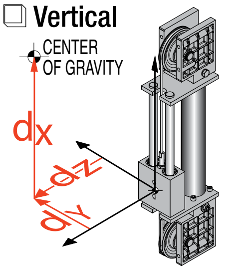

☐ Angled α ___________

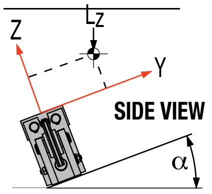

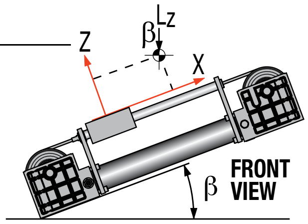

OTHER ISSUES: (i.e. Environment, Temperature, Contamination, etc.)

Contact information:

Fax (1-763-478-8080) or call Tolomatic (1-800-328-2174) with the above information. We will provide any assistance needed to determine the proper actuator.

TC: Track Cable Cylinder Selection Guidelines - All Sizes

PROVIDING LOAD GUIDANCE AND SUPPORT

1 COMPILE APPLICATION REQUIREMENTS

To determine the appropriate Track Cable Cylinder for an application, compile the following information:

- Available pressure (PSI)
- Weight of load (lbs. or kgs.)
- Orientation of load (Vertical, Horizontal, Incline or Remote)
- Velocity of load (in./sec. or mm/sec.)
- Stroke length (in. or mm)

2 SELECT CYLINDER SIZE

- Consult the Theoretical Force vs. Pressure charts.
- Cross-reference the load force (or load weight if force is not known) and the available operating pressure. If the intersection falls below the diagonal line, and if moments do not exceed maximum values listed for that model (see Step 3), the actuator will accommodate the application. If the intersection is above the diagonal line, a larger cylinder bore size should be considered.

NOTE: Additional force may be required to obtain the necessary acceleration for vertical or horizontal loads.

3 KEEP UNDER MAXIMUM STROKE LENGTH

There are specific maximum stroke lengths for each model.
TC05: 67.00"
TC07: 78.00"
TC10: 78.00"
TC15: 282.59"

4 DETERMINE NATURE OF LOAD AND THE EFFECT OF BENDING MOMENTS

If the actuator will guide and support a load located directly over the center of carrier, bending moments will not be a factor in the actuator selection. Track Cable Cylinders perform best that way. See the Bending Moments Formulae below if your application requires the load to be away from center of the carrier.

5 DETERMINE THE BEARING ROD LOAD CAPACITY

Determine whether the Load Weight and Stroke Length will be within the load capacity for the bearing rods.

Cross reference the load weight and stroke on the Load Weight vs. Stroke chart for the selected bore size. (Page cc_20, cc_21) If the intersection falls within the curve, the cylinder will accommodate the application requirements. If the intersection falls outside the curve, consult the chart of a larger bore size that will accommodate the required load weight and stroke for your application.

The weight on the bearing rods causes them to bend or deflect slightly over their length. This deflection is increased for longer rods and/or higher weights on the bearing block. For proper operation, rod deflection must not exceed .30 of an inch.

6 DETERMINE INTERNAL CUSHION CAPACITY

- Consult the Cushion Data chart (Cushion Data for Track Cable Cylinders page cc_7 to cc_11) for the model selected. The velocities listed on the cushion charts are final or cushion impact velocities. On applications where internal cushions are to be used, be sure the actual, final or impact velocity is known. If the velocity is not known, use of limit switches with valve deceleration circuits or shock absorbers should be considered.

BENDING MOMENTS

Loading Equation Data

MODEL	BORE SIZE	A (in.)	D (in.)	F (lbs.)	G (lbs.)
TC05	1/2"	1.09	1.0	14.00	–
TC07	3/4"	1.09	1.0	14.00	–
TC10	1"	1.09	1.0	14.00	–
TC15	1-1/2"	1.68	2.31	90.00	–

"L" MOMENT

$$L = \frac{W}{2}$$

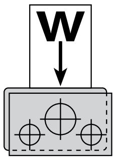

"Mx" MOMENT

$$L = \frac{WB}{A}$$

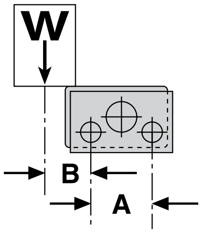

"My" / "Mz" MOMENT

$$F \text{ or } G = 2L = \frac{WB}{D}$$

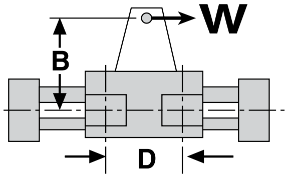

Loading Equation Key

A = Distance between shaft centers.
B = Distance from load center to center of nearest shaft (in.); determined by application.
L = Load per shaft (lbs.).
W = Payload weight (lbs.).
D = Axial distance between center of bearings (in.).
F = Max. bearing sliding load (linear bearings) (lbs.).
G = Max. bearing sliding load (sintered bronze bearings) (lbs.)

CC Cable Cylinder Application Guidelines - All Sizes

1 PROOF-LOADING AND PRETENSIONING CABLES

Once installed, but before putting in service, the cables on the cylinder should be proof-loaded and pretensioned to ensure that they are rigid for the maximum service life of the cylinder.

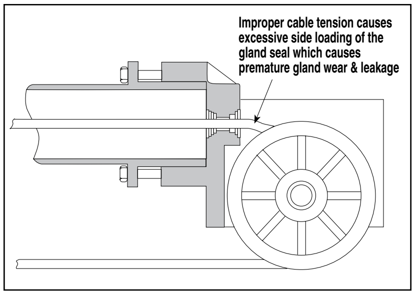

Proof-loading and pretensioning involve removing the two types of stretch in the cable by adjusting the clevis terminal lock nuts.

- Proof-loading – When cables are manufactured, individual wires and strands are laid in position but left slightly loose. When subjected to proof-loading the wires align themselves, tighten and constructional stretch in the cable is eliminated.
- Pretensioning– Elastic stretch in cable is inherent in the wire itself. It is removed when subjected to pretensioning.

There are two ways to proof-load and pretension a cylinder's cables — The Torque Method or The Field Method. These two methods are explained at right. Either method may be used.

All cables should be checked periodically from a preventative maintenance standpoint. When installing new cable assemblies proof-load and pretension using these same methods.

THE TORQUE METHOD

1. Tighten the clevis terminal lock nuts equally with a torque wrench to the values listed under Proof-loading torque in the Proof-loading, Pretensioning table below.
2. Let tightened nuts sit for 30 seconds.
3. Loosen the lock nuts to remove tension (but tight enough to eliminate any slack).
4. Re-torque clevis terminal lock nuts equally with a torque wrench to the total preten-sioning figures listed in the table below.

PROOF-LOADING AND PRETENSIONING TORQUE OF CABLES

CC Model	Proof-loading Torque		Pretensioning Torque		+ Starting Torque of Nuts on Terminals		= Total Pretensioning Torque	
CC05	15 in.-lbs.	1.69 N-m	2.5 in.-lbs.	0.28 N-m	10 in.-lbs.	1.13 N-m	12.5 in.-lbs.	1.41 N-m
CC07	15 in.-lbs.	1.69 N-m	2.5 in.-lbs.	0.28 N-m	10 in.-lbs.	1.13 N-m	12.5 in.-lbs.	1.41 N-m
CC10	15 in.-lbs.	1.69 N-m	2.5 in.-lbs.	0.28 N-m	10 in.-lbs.	1.13 N-m	12.5 in.-lbs.	1.41 N-m
CC15	45 in.-lbs.	5.08 N-m	8.0 in.-lbs.	0.90 N-m	20 in.-lbs.	2.26 N-m	28.8 in.-lbs.	3.25 N-m
CC20	115 in.-lbs.	12.99 N-m	46.0 in.-lbs.	5.20 N-m	25 in.-lbs.	2.82 N-m	71.0 in.-lbs.	8.02 N-m
CC25	115 in.-lbs.	12.99 N-m	73.0 in.-lbs.	8.25 N-m	25 in.-lbs.	2.82 N-m	98.0 in.-lbs.	11.07 N-m
CC30	210 in.-lbs.	23.73 N-m	105.0 in.-lbs.	11.86 N-m	25 in.-lbs.	2.82 N-m	130.0 in.-lbs.	14.69 N-m
CC40	210 in.-lbs.	23.73 N-m	187.5 in.-lbs.	21.19 N-m	25 in.-lbs.	2.82 N-m	212.5 in.-lbs.	24.01 N-m
CC50	325 in.-lbs.	36.72 N-m	180.0 in.-lbs.	20.34 N-m	30 in.-lbs.	3.39 N-m	210.0 in.-lbs.	23.73 N-m
CC52	210 in.-lbs.	23.73 N-m	115.0 in.-lbs.	12.99 N-m	25 in.-lbs.	2.82 N-m	140.0 in.-lbs.	15.82 N-m

THE FIELD METHOD

The Field Method simplifies Proof-loading and Pretensioning the cable cylinder by combining the two processes.

1. Block the load some distance from the end of stroke to keep the piston from bottoming.
2. Apply a pressure that is 15% to 20% higher than the actual load pressure.

   NOTE: Load pressure is defined as the pressure required to move the load. When the load is stopped externally, before the piston bottoms, the relief valve or regulator setting becomes the load pressure.
3. Upon pressurizing, one cable will become tight while the other will become slack. Manually adjust out the slack with a wrench on the clevis terminal lock nut.
4. Release the pressure, block the load on the other side and repeat steps 1 through 3. When these steps are done, turn down the regulator pressure to the normal operating pressure and remove the block.

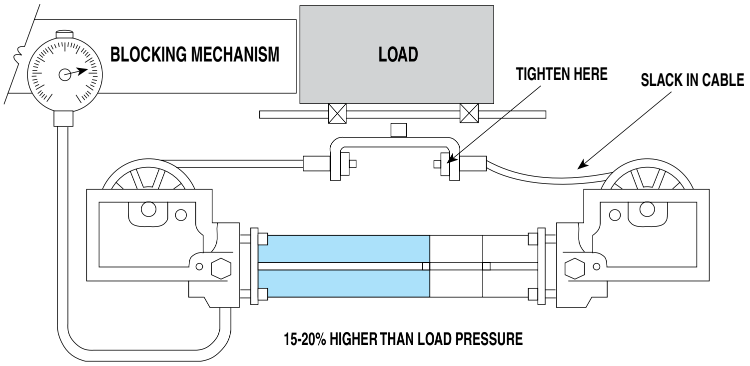

CC Cable Cylinder Application Guidelines - All Sizes

2 DETERMINING SPECIAL CABLE LENGTHS

When an application requires a specialized cable length, use the dimensional table and illustrations to determine the proper cable length.

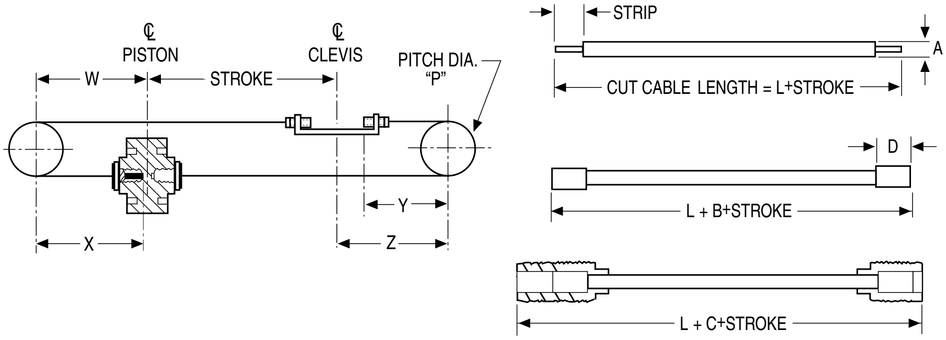

MODEL	P		W		X		Y		Z		STRIP		A		B		C		D		L(std) + Stroke	
	in.	mm.	in.	mm.	in.	mm.	in.	mm.	in.	mm.	in.	mm.	in.	mm.	in.	mm.	in.	mm.	in.	mm.	in.	mm.
CC05	1.500	38.1	1.687	42.8	1.350	34.3	1.406	35.7	1.687	42.8	0.328	8.3	0.093	2.4	0.234	5.9	0.375	9.5	0.437	11.1	4.68	118.9
CC07	1.500	38.1	1.687	42.8	1.350	34.3	1.406	35.7	1.687	42.8	0.328	8.3	0.093	2.4	0.234	5.9	0.375	9.5	0.437	11.1	4.68	118.9
CC10	1.500	38.1	1.687	42.8	1.350	34.3	1.406	35.7	1.687	42.8	0.328	8.3	0.093	2.4	0.234	5.9	0.375	9.5	0.437	11.1	4.68	118.9
CC15	3.250	82.6	4.452	113.1	4.325	109.9	3.725	94.6	4.452	113.1	0.468	11.9	0.187	4.7	0.343	8.7	0.420	10.7	0.828	21.0	12.50	317.5
CC20	4.250	108.0	5.125	130.2	4.688	119.1	3.426	87.0	5.125	130.2	0.620	15.7	0.250	6.4	0.641	16.3	0.540	13.7	1.060	26.9	14.25	362.0
CC25	4.250	108.0	5.125	130.2	4.688	119.1	3.426	87.0	5.125	130.2	0.620	15.7	0.250	6.4	0.641	16.3	0.540	13.7	1.060	26.9	14.25	362.0
CC30	5.312	134.9	5.687	144.4	5.000	127.0	3.601	91.5	5.687	144.4	0.844	21.4	0.312	7.9	0.500	12.7	0.195	5.0	1.100	27.9	17.00	431.8
CC40	5.312	134.9	6.187	157.1	5.000	127.0	4.315	109.6	6.187	157.1	0.844	21.4	0.312	7.9	0.500	12.7	0.195	5.0	1.100	27.9	17.50	444.5
*CC50	6.000	152.4	9.370	238.0	8.630	219.2	7.820	198.6	9.370	238.0	*1.300	33.0	0.375	9.5	1.000	25.4	0.500	12.7	1.930	49.0	*25.05	636.3
CC52	5.312	134.9	5.702	144.8	5.000	127.0	3.850	97.8	5.702	144.8	0.844	21.4	0.312	7.9	0.500	12.7	0.195	5.0	1.100	27.9	17.00	431.8

*For CC50, Orders shipped prior to Oct. 31, 2017 are **STRIP** 1.180 in [30.0 mm] and **L(std)** 24.55 in [623.6 mm]

3 LUBRICATION GUIDELINES

All Tolomatic cable cylinders require internal lubrication unless specified. To ensure maximum cylinder life, the following guidelines should be followed.

- **Filtration**
  We recommend the use of dry, filtered air in our products. "Filtered air" means a level of 10 Micron or less. "Dry" means air should be free of appreciable amounts of moisture. Regular maintenance of installed filters will generally keep excess moisture in check.

- **External Lubricators**
  External lubrication should be utilized for maximum service life of pneumatic cable cylinders. Lubrication must be maintained in a constant supply or the results will be a dry cylinder prone to premature wear.

  Oil lubricators, (mist or drop) should supply a minimum of 1 drop per 20 standard cubic feet per minute to the cylinder. As a rule of thumb, double that rate if water in the system is suspected. Demanding conditions may require more lubricant.

We recommend a **non-detergent, 20cP @ 140°F** 10-weight lubricant. Optimum conditions for standard cylinder operation are **+32° to +125°F (+0° to 51.6°C).**

- **Sanitary environments**
  Oil mist lubricators must dispense "Food Grade" lubricants to the air supply. Use fluids with ORAL **LD50 toxicity ratings of 35 or higher** such as **Multitherm® PG-1 or equivalent.** Demanding conditions can require a review of the application.

Application Guidelines

The following conditional statements are intended as general guidelines for use of Tolomatic actuators. Since all applications have their own specific operating requirements, consult Tolomatic, Inc. or your local Tolomatic distributor if an application is unconventional or if questions arise regarding the selection process.

CUSHION NEEDLE ADJUSTMENT (BC2, BC3, BC4, CC, SA, DP, TC ONLY)

Adjust the cushion needles in the cylinder heads carefully to obtain a smooth, hesitation free deceleration for your particular application. If there are questions on proper adjustment, please consult Tolomatic, Inc.

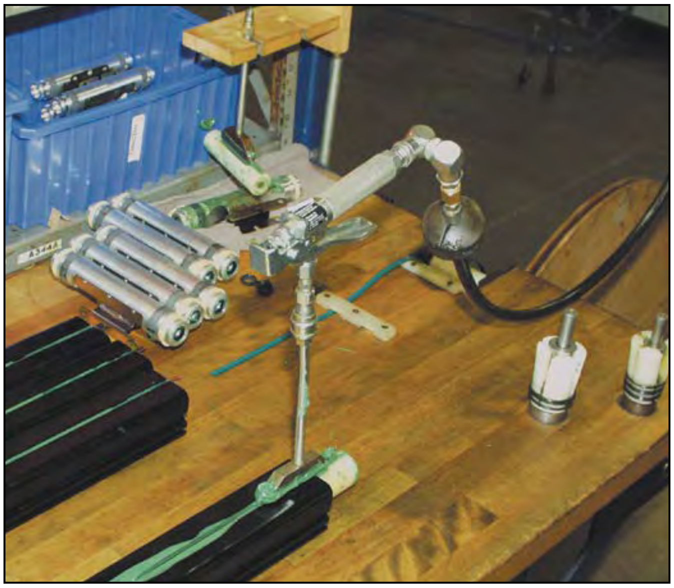

LUBRICATION GUIDELINES

All Tolomatic actuators (except Cable Cylinders) are prelubricated at the factory. To ensure maximum actuator life, the following guidelines should be followed.

- **Filtration**

  We recommend the use of dry, filtered air in our products. "Filtered air" means a level of 10 Micron or less. "Dry" means air should be free of appreciable amounts of moisture. Regular maintenance of installed filters will generally keep excess moisture in check.

- **External Lubricators (optional)**

  The factory prelubrication of Tolomatic actuators will provide optimal performance without the use of external lubrication. However, external lubricators can further extend service life of pneumatic actuators if the supply is kept constant.

  Oil lubricators, (mist or drop) should supply a minimum of 1 drop per 20 standard cubic feet per minute to the cylinder. As a rule of thumb, double that rate if water in the system is suspected. Demanding conditions may require more lubricant.

  If lubricators are used, we recommend a non-detergent, 20cP @ 140°F 10-weight lubricant. Optimum conditions for standard cylinder operation are +32° to +150°F (+0° to 65.5°C).

  NOTE: Use of external lubricators may wash away the factory installed lubrication. External lubricants must be maintained in a constant supply or the results will be a dry actuator prone to premature wear.

- **Sanitary Environments**

  Oil mist lubricators must dispense "Food Grade" lubricants to the air supply. Use fluids with ORAL LD50 toxicity ratings of 35 or higher such as Multitherm® PG-1 or equivalent. Demanding conditions can require a review of the application.

FINAL VELOCITY CALCULATION

Velocity calculations for all rodless cylinders need to differentiate between final velocity and average velocity. For example: Stroking a 100-inch BC3 model in one second yields an average velocity of 100 inches per second. To properly determine the inertial forces for cushioning, it is important to know the final (or impact) velocity. Rodless cylinders accelerate and decelerate at each end of the stroke. Therefore this acceleration must be considered (see diagram).

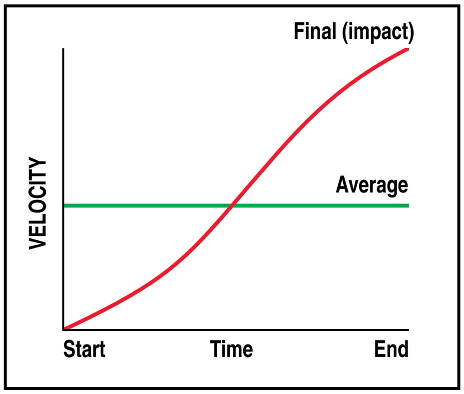

If final (or impact) velocity cannot be calculated directly, a reasonable guideline is to use 2 x average velocity.

CC, SA, DP, TC Service Parts Ordering - ALL Sizes

CABLE ASSEMBLIES[1] AND REPAIR KITS[2] PART NUMBERS

Find the appropriate part number for the specific model and specify that part number with your stroke length when ordering.

MODEL	CABLE ASSY.	REPAIR KITS
CC05	CACC05	RKCC05
TC05	CATC05	RKTC05
CCM05	CACCM05	RKCCM05
TCM05	CATCM05	RKTCM05
CC07	CACC07	RKCC07
SA07	CASA07	RKSA07
TC07	CATC07	RKTC07
CCM07	CACCM07	RKCCM07
SAM07	CASAM07	RKSAM07
TCM07	CATCM07	RKTCM07
CC10	CACC10	RKCC10
SA10	CASA10	RKSA10
TC10	CATC10	RKTC10
CCM10	CACCM10	RKCCM10
SAM10	CASAM10	RKSAM10
TCM10	CATCM15	RKTCM10
CC15	CACC15	RKCC15
DP15	CADP15	RKDP15
SA15	CASA15	RKSA15

MODEL	CABLE ASSY.	REPAIR KITS
TC15	CATC15	RKTC15
CCM15	CACCM15	RKCCM15
DPM15	CADPM15	RKDPM15
SAM15	CASAM15	RKSAM15
TCM15	CATCM15	RKTCM15
CC20	CACC20	RKCC20
DP20	CADP20	RKDP20
SA20	CASA20	RKSA20
CCM20	CACCM20	RKCCM20
DPM20	CADPM20	RKDPM20
SAM20	CASAM20	RKSAM20
CC25	CACC25	RKCC25
DP25	CADP25	RKDP25
SA25	CASA25	RKSA25
CCM25	CACCM25	RKCCM25
DPM25	CADPM25	RKDPM25
SAM25	CASAM52	RKSAM25
CC52	CACC52	RKCC52
DP52	CADP52	RKDP52

MODEL	CABLE ASSY.	REPAIR KITS
SA52	CASA52	RKSA52
CCM52	CACCM52	RKCCM52
DPM52	CADPM52	RKDPM52
SAM52	CASAM52	RKSAM52
CC30	CACC30	RKCC30
DP30	CADP30	RKDP30
SA30	CASA30	RKSA30
CCM30	CACCM30	RKCCM30
DPM30	CADPM30	RKDPM30
SAM30	CASAM30	RKSAM30
CC40	CACC40	RKCC40
DP40	CADP40	RKDP40
SA40	CASA40	RKSA40
CCM40	CACCM40	RKCCM40
DPM40	CADPM40	RKDPM40
SAM40	CASAM40	RKSAM40
CC50(ALL)	CACC50	RKCC50
SA50(ALL)	CASA50	RKSA50

Service Parts Ordering NOTES:

1 Cable Assemblies contain: one Cable Assembly (specify stroke).

2 Repair Kits contain: two Cable Assemblies (specify stroke) and all wearable seals required to rebuild the cylinder.

CONFIGURATED REPAIR KIT[2] ORDERING EXAMPLE:

Repair Kits contain: two Cable Assemblies (specify stroke) and all wearable seals required to rebuild the cylinder.

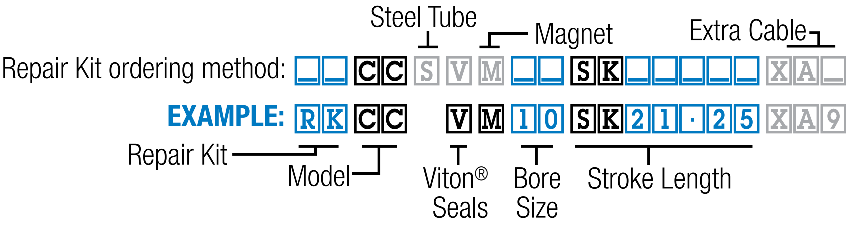

SWITCH ORDERING

Switch Ordering NOTES:

To order field retrofit switch and hardware kits for all Tolomatic actuators: SW (Then the model and bore size, and type of switch required)
(Hardware and Form A Reed switch with 5 meter lead for 1.5" bore cable cylinder)

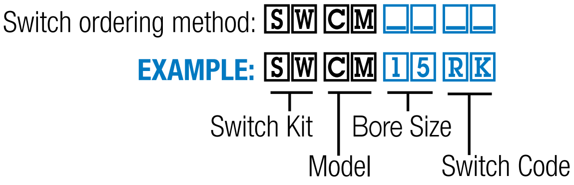

	CONFIG. CODE ORDERING Mounting Hardware & FE conn. included
DESCRIPTION	**CODE**
Switch Kit, Reed, Form C, 5m	BT
Switch Kit, Reed, Form C, Male Conn.	BM
Switch Kit, Reed, Form A, 5m	RT
Switch Kit, Reed, Form A, Male Conn.	RM
Switch Kit, Triac, 5m	CT
Switch Kit, Triac, Male Conn.	CM

NOTE: When kit is ordered female connector & all mounting hardware is included

Cable Cylinder Ordering - CC, SA, DP, TC - All Sizes

MODEL, BORE, STROKE | **OPTIONS**

CC V _ M 15 SK125.250 END #1 HJ END #2 HG RT2 XA_._ XB_._

MODEL

CC	Double Acting Cable Cylinder
SA	Single Acting Cable Cylinder
DP	Double Purchase Cable Cylinder
TC	Track Cable Cylinder

SEALS

V Seals of Viton® material

TUBING

S Steel Tube

✖ *Not available for 05, 07 or 50 size*

✖ *Switches cannot be used with steel tubing*

SWITCH MAGNET

M Internally Mounted Magnet

Required for use with switches

Magnet will increase dead length of CC, SA & DP actuator (see page CC_29)

BORE SIZE

05	0.50" *(16mm)*	**25**	2.50" *(63mm)*
07	0.75" *(19mm)*	**30**	3.00" *(76mm)*
10	1.00" *(25mm)*	**40**	4.00" *(100mm)*
12	1.25" *(32mm)*	**50**	5.00" *(127mm)*
15	1.50" *(40mm)*	**52**	2.00" [500 PSI] *(50mm)*
20	2.00" *(50mm)*		

STROKE LENGTH

SK _ _._ _ Enter desired stroke length in decimal inches

NOTE: Strokes over 281" (7137mm) require Tube Couplers. Consult Tolomatic for lead time. Max. stroke length varies by model and bore size, see dimensions page for specification.

HEAD OPTIONS (CC_22 & CC_25)

Single-ported heads are standard on all cylinders.

Enter head options for [END #1, right end] and/or [END #2, left end] of the cylinder

– – standard single port head

[1,3]**HG** 3-ported head

HI 1" auto tensioner assembly

[3]**HJ** 1" auto tensioner assembly with 3-ported head

HK 2" auto tensioner assembly

[3]**HL** 2" auto tensioner assembly with 3-ported head

[2]**HM** caliper disc brake assembly

[2,3]**HN** caliper disc brake assembly with 3-ported head

[1] Only head option available for single-acting cylinders

[2] Autotensioner assembly required on one end of the cylinder

[3] Cushions are removed on all 3-ported heads

SWITCHES (CC_28)

TYPE		QUICK-DISCONNECT	CODE	QUANTITY	LEAD LENGTH
REED	Form A	QD	**RM**	After code enter quantity desired	5 meters
		no	**RT**		
	Form C	QD	**BM**		
		no	**BT**		
TRIAC		QD	**CM**		
		no	**CT**		

EXTRA CABLE

XA	for extra beyond standard in inches
XB	for extra beyond standard in inches

Not all codes listed are compatible with all options. Contact Tolomatic with any questions.

Tolomatic™
EXCELLENCE *IN MOTION*

PB2 ROD CYLINDER SLIDES

CONTENTS

PB2 Rod Cylinder Slides - All Sizes

APPLICATIONS

Material Handling

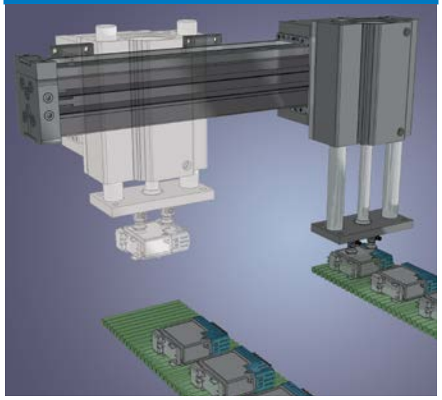

A pick and place application for moving product between conveyors.

Customer Challenge:

A manufacturer of consumer electronic equipment needed a method to move finished product from one conveyor to another quickly without damage or waste.

Application Requirements:

- Fast response, throughput of 20 products per minute
- Consistent positioning
- End-of-stroke adjustment to accommodate varying product lines

Tolomatic Solution:

This side mounted BC3D Band Cylinder with dual 180° option provides the motion along the X axis and support for the PB2 rod cylinder slide which provides the Y axis motion. In this application dual vacuum cups are used, however they are often replaced with a gripper unit with custom tooled fingers for product that does not present a smooth flat surface.

Result:

This continuing customer is pleased with the durability, price and delivery that the BC3 and PB2 actuators manufactured by Tolomatic provide.

Material Handling

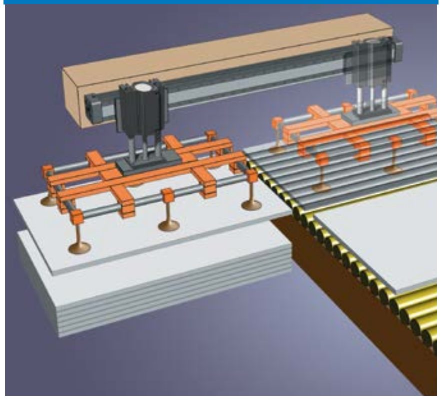

Vacuumized sheet transfer application.

Customer Challenge:

A manufacturer of battery chargers needed a method of taking sheet metal off of pallets and placing onto the assembly line. Speed is critical and end-of-stroke position must be consistent, thus, Tolomatic pneumatic products were chosen for this system.

Application Requirements:

- Fast response, 1 part must be reoriented and moved each 3 seconds
- Movement from end-of-stroke to end-of-stroke with consistent positioning
- Low cost
- End-of-stroke adjustment

Tolomatic Solution:

This application uses a Tolomatic PB2 Rod Cylinder Slide, attached to a BC3 Band Cylinder with adjustable shocks. This actuator assembly moves the vacuum grid attachment that holds the sheet metal.

Result:

The BC3 and PB2 has long-lasting durability for reliable performance at the required speed. This continuing customer is pleased with the price and delivery that Tolomatic provides.

PB2 POWER-BLOCK 2

ENDURANCE TECHNOLOGY℠

A Tolomatic Design Principle

Endurance Technology features are designed for maximum durability to provide extended service life.

The Power Block 2 rod cylinder slide features two precision steel guide rods with linear ball or composite bearings to provide positive support of the load. The Power Block 2 withstands heavy side loads making it a great choice for conveyor line stops and load lifting applications. Built-to-order in stroke lengths up to 6 inches.

HIGH PRESSURE CAPABLE

Designed for pressures up to 100 PSI (6.9 bar) with a 10,000,000 cycle rating

PISTON MAGNET

Piston magnet is a standard feature allowing sensor mounting whenever required

INTERNAL BUMPERS

Made of urethane composite to prolong cylinder life and reduce noise

LARGE SHAFTS

Shafts up to 1.25" diameter

DURABLE DESIGN

Tough, lightweight extruded aluminum in a low profile package

DURABLE BEARING OPTIONS

LINEAR BALL BEARINGS

- Low friction, long life
- Best tooling plate accuracy

COMPOSITE BEARINGS

- Thin profile allows use of oversize guide rods
- Best choice for impact use or high contaminant environments

MOUNTING FLEXIBILITY

T-slots and threaded holes for base mounting

PLATED STEEL TOOLING PLATE

Threaded bolt thru holes for tooling plate mounting

OPTIONS

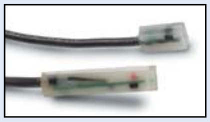

SWITCHES

- Available in Reed, Hall-effect and Triac
- 15ft. cable with flying leads; available with quick-disconnect couplers

PB2 Power-Block2 Rod Cylinder Slide - 20, 32 Sizes

PERFORMANCE

THEORETICAL FORCE vs PRESSURE

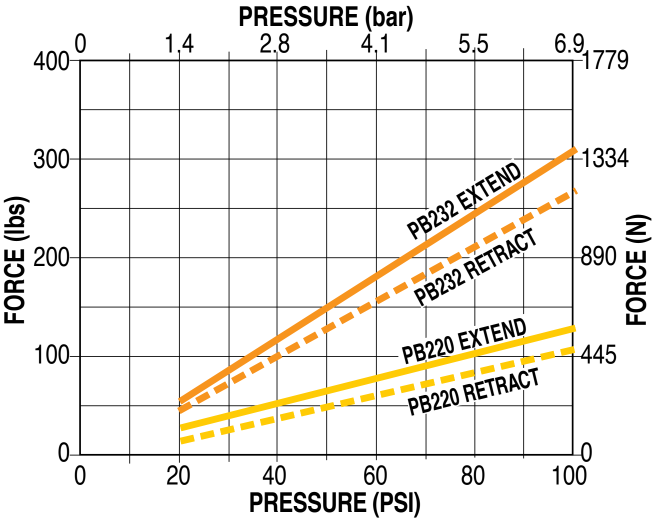

MAX. LOAD WEIGHT vs STROKE LENGTH

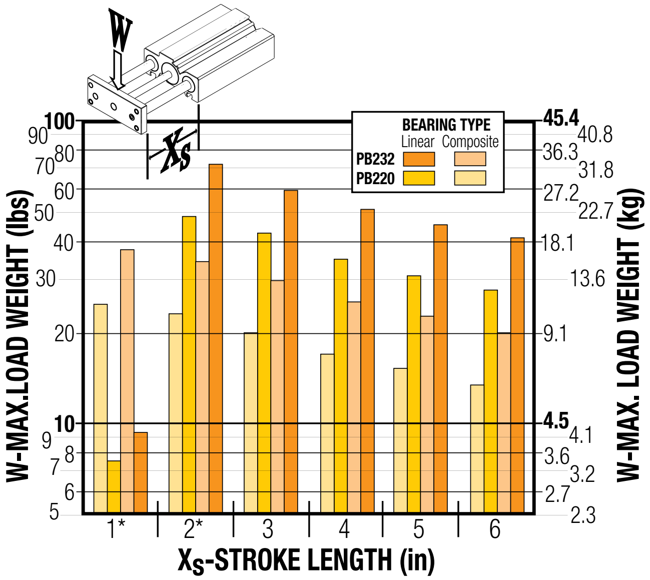

*PB220, PB232 and PB252 - 1" Stroke and PB252 - 2" Stroke are units with one set of bearings.

BENDING MOMENTS

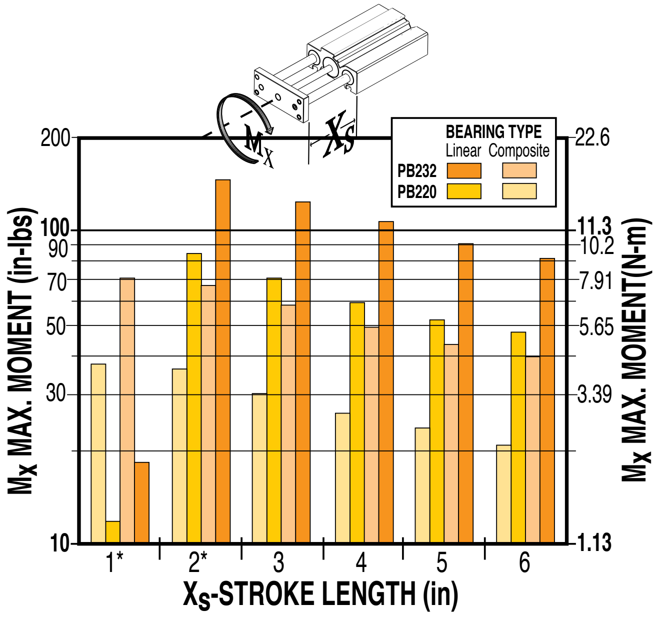

*PB220, PB232 and PB252 - 1" Stroke and PB252 - 2" Stroke are units with one set of bearings.

LOAD WEIGHT vs VELOCITY (USING INTERNAL BUMPERS)

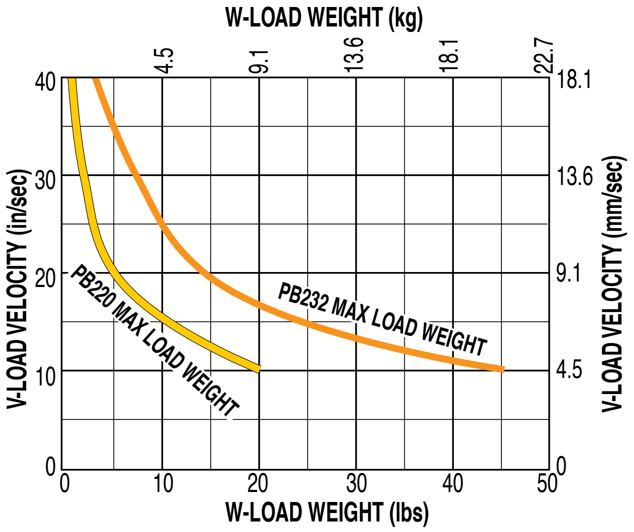

FORCE VS. PRESSURE
Force vs Pressure performance data applies to models with composite bearings.

MAX. LOAD WEIGHT vs STROKE LENGTH
Do not exceed Max. Load curve. Max. Load for composite bearings is based on 200 million linear inches of travel.

BENDING MOMENTS
Max. Moment for composite bearings is based on 200 million linear inches of travel.

LOAD VS VELOCITY
Do not exceed Max. Load curve. Max. Load for Power-Block is based on 200 million linear inches of travel.

PB2 Power-Block2 Rod Cylinder Slide - All Sizes

SPECIFICATIONS

LB = Linear Bearing **CB = Composite Bearing**

SIZE			**20**		**32**	
BEARING			**LB**	**CB**	**LB**	**CB**
BORE SIZE		in	1.25		2.00	
		mm	*31.8*		*50.8*	
STROKE & WEIGHT	0.5" *(13mm)*	lbs	NA	NA	NA	NA
		kg				
	1.0" *(25mm)*	lbs	2.79	3.32	4.85	5.59
		kg	*1.27*	*1.51*	*2.20*	*2.54*
	1.5" *(38mm)*	lbs	NA	NA	NA	NA
		kg				
	2.0" *(51mm)*	lbs	3.87	4.36	6.43	6.95
		kg	*1.76*	*1.98*	*2.92*	*3.15*
	3.0" *(76mm)*	lbs	4.49	5.14	5.48	8.03
		kg	*2.04*	*2.33*	*2.49*	*3.64*
	4.0" *(102mm)*	lbs	5.11	5.92	8.20	9.12
		kg	*2.32*	*2.69*	*3.72*	*4.14*
	5.0" *(127mm)*	lbs	5.72	6.71	9.08	10.20
		kg	*2.59*	*3.04*	*4.12*	*4.63*
	6.0" *(152mm)*	lbs	6.34	7.49	9.97	11.28
		kg	*2.88*	*3.40*	*4.52*	*5.12*
STROKE LENGTH		in	1.0, 2.0, 3.0, 4.0, 5.0, 6.0			
		mm	*25, 51, 76, 102, 127, 152*			
MAX. PRESSURE		PSI	100			
		bar	*6.895*			
TEMP. RANGE		°F	20 to 140			
		°C	*-7 to 60*			

IMPACT LOADING

(Composite Bearings ONLY)

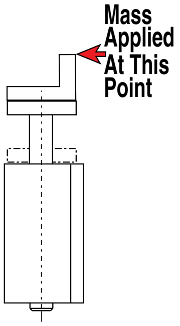

$$KE=\frac{1}{2}\frac{w}{g}v^2$$

KE = Energy
w = Weight in Lbs.
g = 32.2 Ft./sec.^{2} (gravitational constant)
v = Ft./sec. (velocity)

In applications such as conveyor stops impact loading may be a factor. The table below gives the maximum KE energy for each of the PB2 models. Use the above equation to determine the KE for your application. Your result should not exceed the maximum KE for the PB2 model you select.

	BORE SIZE		**MAX. "KE"**	
	in	mm	in-lbs	N-m
20	1.250	31.8	40.80	4.61
32	2.000	50.8	129.60	14.64

PB2 Power-Block2 Rod Cylinder Slide - All Sizes

DIMENSIONS

3D CAD available at www.tolomatic.com
Always use configurated CAD solid model
to determine critical dimensions

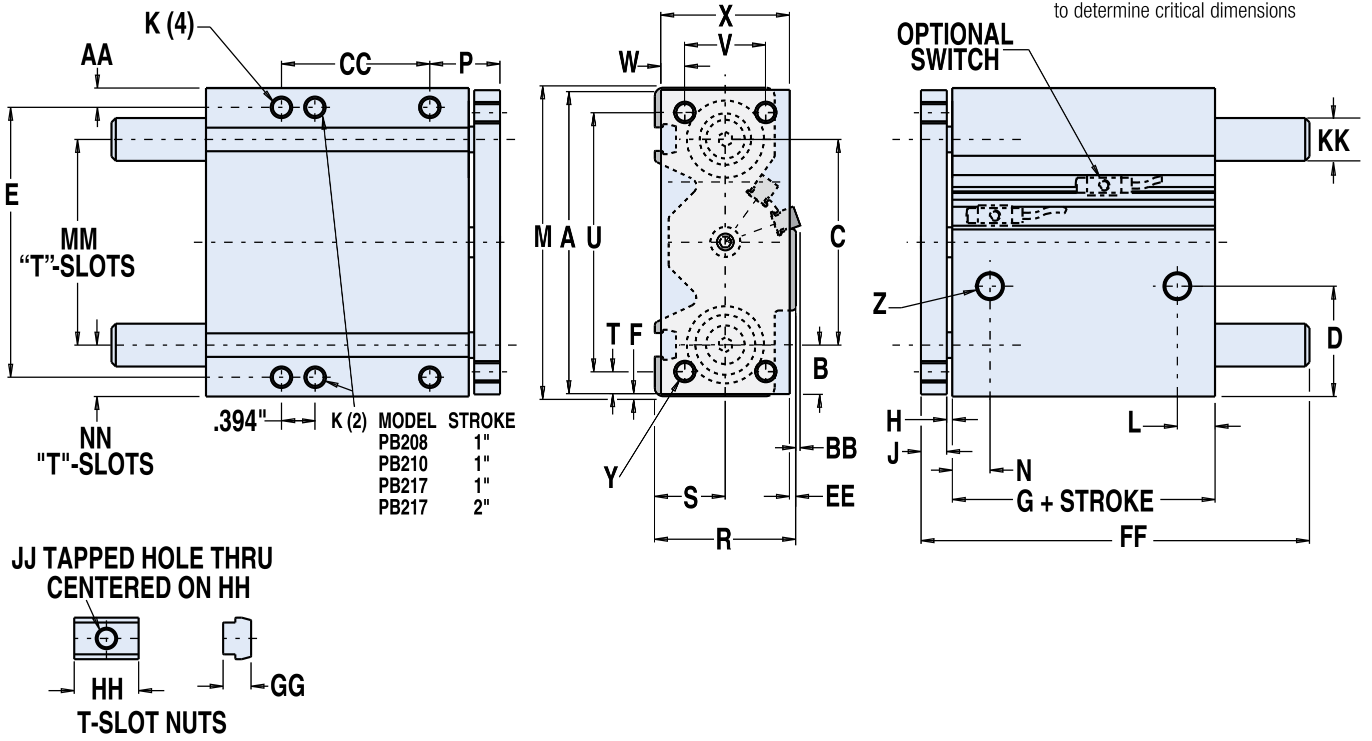

Size	20		32	
Bore	**1.250 *(31.8)***		**2.000 *(50.8)***	
A	4.440	*112.8*	5.440	*138.2*
B	0.72	*18.3*	0.81	*20.6*
C	3.00	*76.2*	3.81	*96.9*
D	1.610	*40.9*	1.670	*42.4*
E	3.937	*100.0*	4.882	*124.0*
F	0.031	*0.8*	0.031	*0.8*
G	1.834	*46.6*	2.297	*58.3*
H	0.082	*2.1*	0.063	*1.6*
J	0.38	*9.7*	0.50	*12.7*
K	5/16-18 x .44 DP (4)		3/8-16 x .56 DP (4)	
L	0.53	*13.5*	0.58	*14.7*
M	4.50	*114.3*	5.50	*139.7*
N	0.53	*13.5*	0.58	*14.7*
P	1.02	*26.0*	1.14	*29.0*
R	2.06	*52.3*	2.48	*63.0*
S	1.03	*26.2*	1.23	*31.2*
T	0.33	*8.4*	0.36	*9.1*
U	3.780	*96.01*	4.724	*119.99*
V	1.181	*30.00*	1.575	*40.01*
W	0.35	*8.9*	0.37	*9.4*
X	1.88	*47.8*	2.38	*60.5*
Y	5/16-18 Thru (4)		3/8-16 Thru (4)	
Z	1/8-27 NPT (2)		1/4-18 NPT (2)	
AA	0.28	*7.1*	0.31	*7.9*
BB	0.06	*1.5*	–	–

	Size	20		32	
	Bore	**1.250 *(31.8)***		**2.000 *(50.8)***	
CC - STROKE LENGTH	**0.5**	NA		NA	
	1.0	1.181	*30.00*	1.378	*35.00*
	1.5	NA		NA	
	2.0	2.165	*54.99*	2.362	*59.99*
	3.0	3.150	*80.01*	3.346	*84.99*
	4.0	4.134	*105.00*	4.331	*110.01*
	5.0	5.118	*130.00*	5.315	*135.00*
	6.0	6.102	*154.99*	6.299	*159.99*
	EE	0.09	*2.3*	0.03	*0.8*
FF - Linear Bearing / Stroke Length	**0.5**	NA		NA	
	1.0	3.17	*80.5*	3.43	*87.1*
	1.5	NA		NA	
	2.0	5.67	*144.0*	6.06	*153.9*
	3.0	6.67	*169.4*	7.06	*179.3*
	4.0	7.67	*194.8*	8.06	*204.7*
	5.0	8.67	*220.2*	9.06	*230.1*
	6.0	9.67	*245.6*	10.06	*255.5*
FF - Composite Bearing / Stroke Length	**0.5**	NA		NA	
	1.0	3.92	*99.6*	4.43	*112.5*
	1.5	NA		NA	
	2.0	5.67	*144.0*	6.06	*153.9*
	3.0	6.67	*169.4*	7.06	*179.3*
	4.0	7.67	*194.8*	8.06	*204.7*
	5.0	8.67	*220.2*	9.06	*230.1*
	6.0	9.67	*245.6*	10.06	*255.5*
	GG	0.25	*6.4*	0.41	*10.4*
	HH	0.75	*19.1*	0.94	*23.9*
	JJ	1/4-20		5/16-18	
KK - Shaft Ø	**LB**	0.625	*15.88*	0.750	*19.05*
	CB	0.875	*22.23*	1.000	*25.40*
	MM	3.000	*76.2*	3.625	*92.1*
	NN	0.75	*19.1*	0.94	*23.9*

LB = Linear Bearing

CB = Composite Bearing

SWITCHES

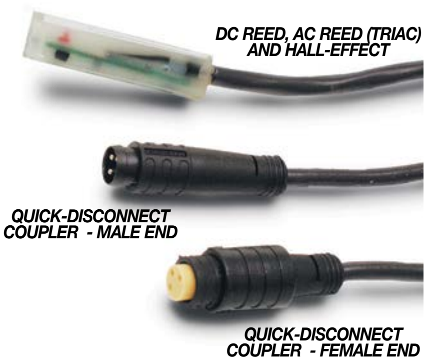

There are 10 sensing choices: DC reed, form A (open) or form C (open or closed); AC reed (Triac, open); Hall-effect, sourcing, PNP (open); Hall-effect, sinking, NPN (open); each with either flying leads or QD (quick disconnect). Commonly used to send analog signals to PLC (programmable logic controllers), TLL, CMOS circuit or other controller device. These switches are activated by the actuator's magnet.

Switches contain reverse polarity protection. QD cables are shielded; shield should be terminated at flying lead end.

If necessary to remove factory installed switches, be sure to reinstall on the same of side of actuator with scored face of switch toward internal magnet.

SPECIFICATIONS

	REED DC				REED AC		HALL-EFFECT DC			
ORDER CODE	RT	RM	BT	BM	CT	CM	TT	TM	KT	KM
LEAD	5m	QD*	5m	QD*	5m	QD*	5m	QD*	5m	QD*
CABLE SHIELDING	Unshielded	Shielded†	Unshielded	Shielded†	Unshielded	Shielded†	Unshielded	Shielded†	Unshielded	Shielded†
SWITCHING LOGIC	"A" Normally Open		"C" Normally Open or Closed		Triac Normally Open		PNP (Sourcing) Normally Open		NPN (Sinking) Normally Open	
MECHANICAL CONTACTS	Single-Pole Single-Throw		Single-Pole Double-Throw		Single-Pole Single-Throw		NO, These Are Solid State Components			
COIL DIRECT	Yes		Yes		Yes		—			
POWER LED	None		None		None		None		None	
SIGNAL LED	Red						Red		Red	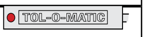
OPERATING VOLTAGE	200 Vdc max.		120 Vdc max.		120 Vac max.		5 - 25 Vdc			
OUTPUT RATING	—				—		25 Vdc, 200mA dc			
OPERATING TIME	0.6 msec max. (including bounce)		0.7 msec max. (including bounce)		—		< 10 micro sec.			
OPERATING TEMPERATURE	-40°F [-40°C] to 158°F [70°C]						0°F [-18°C] to 150°F [66°C]			
RELEASE TIME	1.0 msec. max.				—		—			
ON TRIP POINT	—				—		150 Gauss maximum			
OFF TRIP POINT	—				—		40 Gauss minimum			
****POWER RATING (WATTS)**	10.0 §		3.0 §§		10.0		5.0			
VOLTAGE DROP	2.6 V typical at 100 mA		NA		—		—			
RESISTANCE	0.1 Ω Initial (Max.)				—		—			
CURRENT CONSUMPTION	—				1 Amp at 86°F [30°C]	0.5 Amp at 140°F [60°C]	200 mA at 25 Vdc			
FREQUENCY	—				47 - 63 Hz		—			
CABLE MIN. BEND RADIUS STATIC	0.630" *[16mm]*									
DYNAMIC	Not Recommended									

CAUTION: DO NOT OVER TIGHTEN SWITCH HARDWARE WHEN INSTALLING!

** **WARNING**: Do not exceed power rating (Watt = Voltage X Amperage). Permanent damage to sensor will occur.

*QD = Quick Disconnect; Male coupler is located 6" [152mm} from sensor,
Female coupler to flying lead distance is 197" [5m] also see Cable Shielding specification above

REPLACEMENT OF QD SWITCHES MANUFACTURED BEFORE JULY 1, 1997: It will be necessary to replace or rewire the female end coupler.

CURRENT
Quick disconnect
Wiring

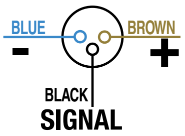

OLD
Quick disconnect
Wiring

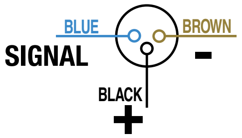

Reed Switch Life Expectancy: Up to 200,000,000 cycles (depending on load current, duty cycle and environmental conditions)

†Shielded from the female quick disconnect coupler to the flying leads. Shield should be terminated at flying lead end.

§ Maximum current 500mA (not to exceed 10VA) Refer to Temperature vs. Current graph and Voltage Derating graph

§§ Maximum current 250mA (not to exceed 3VA) Refer to Temperature vs. Current graph and Voltage Derating graph

PB & PB2 Switches - All Sizes

PERFORMANCE

TEMP. vs CURRENT, DC REED

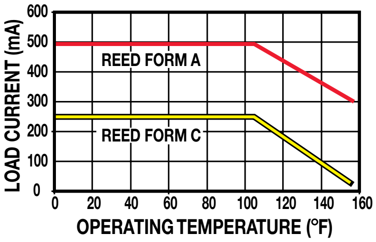

TEMP. vs CURRENT, AC REED

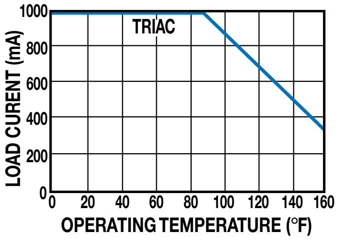

VOLTAGE DERATING, DC REED

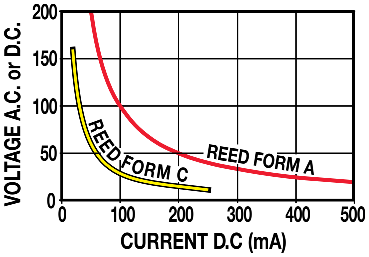

WIRING DIAGRAMS

RT & RM DC REED, FORM A

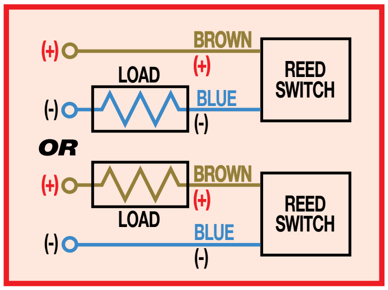

CT & CM AC REED, TRIAC

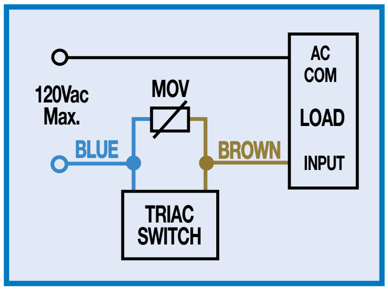

BT & BM DC REED, FORM C

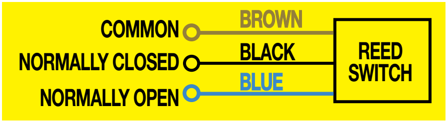

TT & TM HALL-EFFECT, SOURCING, PNP

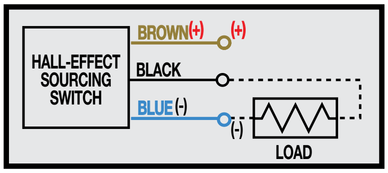

KT & KM HALL-EFFECT, SINKING, NPI

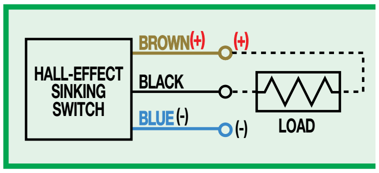

INSTALLATION INFORMATION

⚠ THE NOTCHED FACE OF THE SWITCH INDICATES THE SENSING SURFACE AND MUST FACE TOWARD THE MAGNET.

DIMENSIONS

PB220
PB232

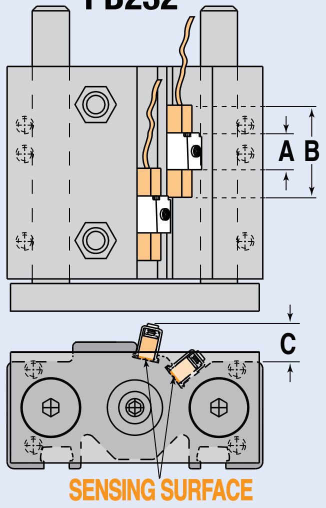

MODEL	BORE	A	B	C
PB220	1.250	0.50	1.25	0.48
PB232	2.000	0.50	1.25	0.64

Dimensions in inches

MODEL	BORE	A	B	C
PB220	31.75	12.70	31.75	12.19
PB232	50.80	12.70	31.75	16.26

Dimensions in millimeters

Application Data Worksheet

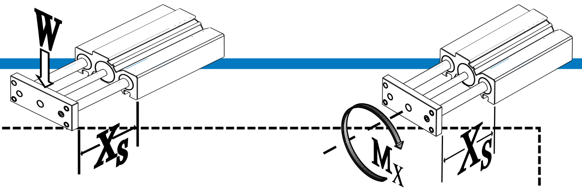

STROKE LENGTH ________________
☐ inch (SK) (U.S. Standard)
☐ millimeters (Metric)

AVAILABLE AIR PRESSURE ______
☐ PSI (U.S. Standard)
☐ bar (Metric)

REQUIRED THRUST FORCE ______
☐ lbf (U.S. Standard)
☐ N (Metric)

LOAD ____________________________
☐ lb (U.S. Standard)
☐ kg (Metric)

LOAD CENTER OF GRAVITY DISTANCE TO TOOLING PLATE CENTER
d_x ________
d_y ________
d_z ________
☐ inch (U.S. Standard)
☐ millimeters (Metric)

FORCES APPLIED TO TOOLING PLATE W ________
☐ lbf (U.S. Standard)
☐ N (Metric)

BENDING MOMENTS APPLIED TO TOOLING PLATE M_x ________
☐ in-lbs (U.S. Standard)
☐ N-m (Metric)

FINAL VELOCITY ________________
☐ in/sec (U.S. Standard)
☐ mm/sec (Metric)

MOVE TIME sec. ________________

NO. OF CYCLES ________________
☐ per minute
☐ per hour

ORIENTATION

☐ Horizontal

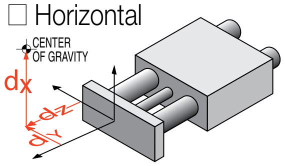

☐ Vertical

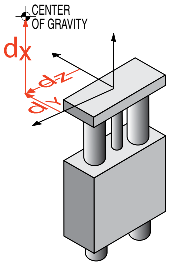

☐ Vertical Down

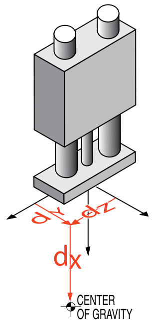

☐ Horizontal Side

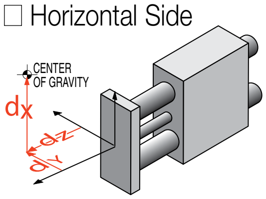

☐ Angled α ____________ β ____________

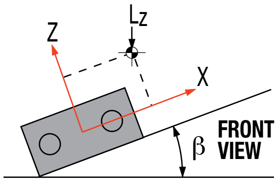

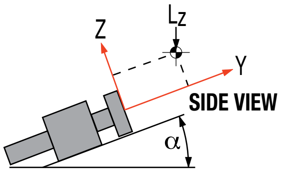

OTHER ISSUES:
(i.e. Environment, Temperature, Contamination, etc.) ____________________________________

Contact information: ____________________________________

Fax (1-763-478-8080) or call Tolomatic (1-800-328-2174) with the above information.
We will provide any assistance needed to determine the proper actuator.

Rod Cylinder Slide Selection Guidelines - PB & PB2 - All Sizes

PROVIDING LOAD GUIDANCE AND SUPPORT

The process of selecting a load bearing actuator for a given application can be complex. It is highly recommended that you contact Tolomatic or a Tolomatic Distributor for assistance in selecting the best actuator for your application. The following overview of the selection guidelines are for educational purposes only.

1 COMPILE APPLICATION REQUIREMENTS

To determine the appropriate Tolomatic rod cylinder slide for an application, compile the following information:

- Available pressure (PSI)
- Weight of load (lbs. or kgs.)
- Orientation of load (lbs. or kgs.)
- Velocity of load (in./sec. or mm/sec.)
- Stroke length (in. or mm)

Use the Application Data Worksheet on page PB_9

2 SELECT ROD CYLINDER SLIDE SIZE

- Consult the Theoretical Force vs. Pressure graphs

  NOTE: Graphs for PB2 are on page PB_4.

- Cross-reference the load force (or load weight if force is not known) and the available operating pressure. If the intersection falls below the diagonal line, and if moments do not exceed maximum values listed for that model (see Step 4) the Tolomatic rod cylinder slide will accommodate the application. If the intersection is above the diagonal line, a larger rod cylinder slide bore size should be considered.

NOTE: Additional force may be required to obtain the necessary acceleration for vertical or horizontal loads.

3 DETERMINE EFFECT OF LOAD VS. EXTENDED LENGTH

- Consult the Max. Load Weight vs Stroke Length Chart for the Tolomatic rod cylinder slides.
- Cross-reference the load weight and the extended length. If the intersection falls below the maximum load line, and if moments do not exceed maximum values listed for that model (see Step 4), the rod cylinder slide will accommodate the application. If the intersection is above the diagonal line, a larger rod cylinder slide bore size should be considered.

4 DETERMINE NATURE OF LOAD AND THE EFFECT OF BENDING MOMENTS

If the rod cylinder slide will guide and support a load located directly on center of the tooling plate, bending moments will not be a factor in the rod cylinder slide selection.

NOTE: the maximum load weight “W” must not exceed the capacity limits of the rod cylinder slide selected.

- Bending Moments

  For off center or side loads, determine the distance from the center of mass of the load to the center of the tooling plate. This measurement is needed to calculate the torque for bending moments.

Should the resulting maximum bending moment exceed figures indicated on the chart, a larger rod cylinder slide should be considered.

5 DETERMINE INTERNAL BUMPER CAPACITY [POWER-BLOCK2 ONLY]

- Consult the Load vs Velocity Data Chart for the Power-Block model selected. The velocities listed on the charts are final or bumper impact velocities.
- Cross-reference the final velocity and weight of the load. If the intersection is below the diagonal lines, the internal bumpers on the Power-Block2 may be used. If the point falls above the dashed diagonal line or if the velocity is not known, select a larger rod cylinder slide. On high-cyclic applications, use of external stops is strongly recommended.

6 CONSIDER OPTIONS

- Switches– dc Reed, Hall-effect, or ac Triac - (All Models)
- Bumpers and Stop Collars - (Power-Block)
- Dual Tooling Plate (Power-Block)

The following conditional statements are intended as general guidelines for use of Tolomatic actuators. Since all applications have their own specific operating requirements, consult Tolomatic, Inc. or your local Tolomatic distributor if an application is unconventional or if questions arise regarding the selection process.

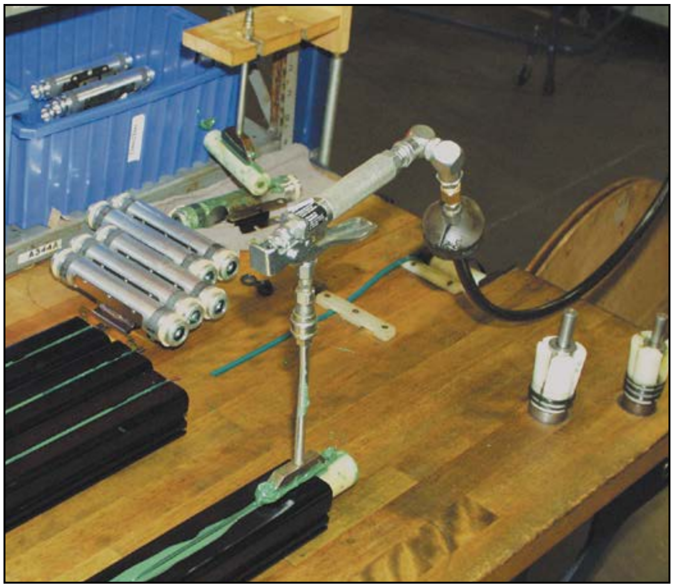

LUBRICATION GUIDELINES

All Tolomatic actuators (except Cable Cylinders) are prelubricated at the factory. To ensure maximum actuator life, the following guidelines should be followed.

- **Filtration**

  We recommend the use of dry, filtered air in our products. "Filtered air" means a level of 10 Micron or less. "Dry" means air should be free of appreciable amounts of moisture. Regular maintenance of installed filters will generally keep excess moisture in check.

- **External Lubricators (optional)**

  The factory prelubrication of Tolomatic actuators will provide optimal performance without the use of external lubrication. However, external lubricators can further extend service life of pneumatic actuators if the supply is kept constant.

  Oil lubricators, (mist or drop) should supply a minimum of 1 drop per 20 standard cubic feet per minute to the cylinder. As a rule of thumb, double that rate if water in the system is suspected. Demanding conditions may require more lubricant.

  If lubricators are used, we recommend a non-detergent, 20cP @ 140˚F 10-weight lubricant. Optimum conditions for standard cylinder operation are +32˚ to +150˚F (+0˚ to 65.5˚C).

  NOTE: Use of external lubricators may wash away the factory installed lubrication. External lubricants must be maintained in a constant supply or the results will be a dry actuator prone to premature wear.

- **Sanitary Environments**

  Oil mist lubricators must dispense "Food Grade" lubricants to the air supply. Use fluids with ORAL LD50 toxicity ratings of 35 or higher such as Multitherm® PG-1 or equivalent. Demanding conditions can require a review of the application.

FINAL VELOCITY CALCULATION

Velocity calculations for all rodless cylinders need to differentiate between final velocity and average velocity. For example: Stroking a 100-inch BC3 model in one second yields an average velocity of 100 inches per second. To properly determine the inertial forces for cushioning, it is important to know the final (or impact) velocity. Rodless cylinders accelerate and decelerate at each end of the stroke. Therefore this acceleration must be considered (see diagram).

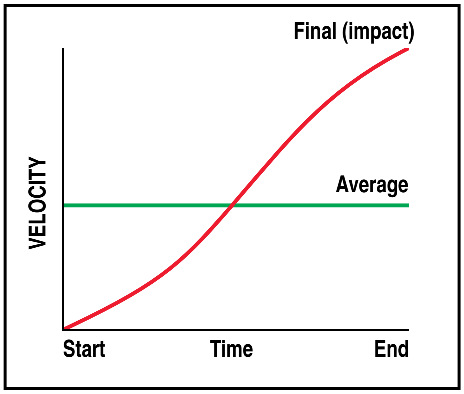

If final (or impact) velocity cannot be calculated directly, a reasonable guideline is to use 2 x average velocity.

PB & PB2 Service Parts Ordering - ALL Sizes

PB: Power-Block Rod Cylinder Slide	**Inch (U.S. Standard)**			
SIZE	**06***	**10***	**17***	**20***
Reed Switch Magnet[1]	2506-9003	2510-9003	2517-9003	2520-9003
Hall-effect Switch Magnet[1]	2506-9004	2510-9004	2517-9004	2520-9004
BP: Stop Collar / Bumper Kit[2]	2506-9002	2510-9002	2517-9002	2520-9002

*Discontinued Size: parts are listed for reference only. All parts listed are limited to stock on hand and are no longer manufactured (1-1-2020)

PB2: Power-Block2 Rod Cylinder Slide	**Inch (U.S. Standard)**					
SIZE	**08***	**10***	**17***	**20**	**32**	**52***
TN: T-Nuts	3410-1013	3410-1013	3415-1013	3415-1013	3420-1013	3420-1013

*Discontinued Size: parts are listed for reference only. All parts listed are limited to stock on hand and are no longer manufactured (1-1-2020)

	CONFIG. CODE ORDERING Mounting Hardware & FE conn. included
DESCRIPTION	**CODE**
Switch Kit, Reed, Form C, 5m	BT
Switch Kit, Reed, Form C, Male Conn.	BM
Switch Kit, Reed, Form A, 5m	RT
Switch Kit, Reed, Form A, Male Conn.	RM
Switch Kit, Triac, 5m	CT
Switch Kit, Triac, Male Conn.	CM
Switch Kit, Hall-effect, Sinking, 5m	KT
Switch Kit, Hall-effect, Sinking, Male Conn.	KM
Switch Kit, Hall-effect, Sourcing, 5m	TT
Switch Kit, Hall-effect, Sourcing, Male Conn.	TM

NOTE: When kit is ordered female connector & all mounting hardware is included

Service Parts Ordering NOTES:

1 One Each

2 Kit includes: 2 (two) stop collars and 2 (two) 1/4” thick polyurethane external bumpers to help absorb impact shock

Switch Ordering NOTES:

To order field retrofit switch and hardware kits for all Tolomatic actuators: SW (Then the model and bore size, and type of switch required)
Example: SWPB20RT
(Hardware and Form A Reed switch with 5 meter lead for 1.25" bore PB Rod Cylinder Slide)

Replacing an existing switch on an actuator manufactured AFTER 7-1-1997
Order using PART NUMBER in table above

Replacing an existing switch on an actuator manufactured BEFORE 7-1-1997
Order using CONFIGURATOR CODE in table above
If replacing a quick-disconnect switch on an actuator manufactured BEFORE 7-1-1997 it will also be necessary to replace or require the female-end coupler with the in-line splice (see page PB_13)

PB2 Ordering - All Sizes

MODEL, BORE, STROKE, BEARING **OPTIONS**

P B 2 2 0 S K 3 0 _ _ B M 2 T N

MODEL & MOUNTING

PB2	Power Block2 Rod Cylinder Slide- inch (U.S. Standard)

T-NUTS (PB2 ONLY)

TN_	For T-Nuts, indicate number required

PB2 BORE SIZE

20	1.25" *(32mm)*
32	2.00" *(51mm)*

BEARING TYPE- PB2

LB	Linear Bearings
CB	Composite Bearings

SWITCHES (PB_7)

(Quantity desired follows ordering code)

RM_	Reed Switch (Form A) with 5-meter lead/QD (Quick-disconnect)
RT_	Reed Switch (Form A) with 5-m lead
BM_	Reed Switch (Form C) with 5-meter lead/QD
BT_	Reed Switch (Form C) with 5-m lead
***KM_**	Hall-effect Sinking Switch with 5-meter lead/QD
***KT_**	Hall-effect Sinking Switch w/ 5-m lead
***TM_**	Hall-effect Sourcing Switch with 5-meter lead/QD
***TT_**	Hall-effect Sourcing Switch with 5-meter lead
CM_	TRIAC Switch with 5-meter lead/QD
CT_	TRIAC Switch with 5-meter lead
***MDR**	Dual Magnet (Reed, Hall-effect, Triac)

* ✖ *Not available for 05 size*

STROKE LENGTH

SK_ _	Enter desired stroke length from the code number in the table below

	ORDER CODE	
STROKE LENGTH	**PB2**	
1.0" *(25mm)*	10	10
2.0" *(51mm)*	20	20
3.0" *(76mm)*	30	30
4.0" *(102mm)*	40	40
5.0" *(127mm)*	50	50
6.0" *(152mm)*	60	60

Not all codes listed are compatible with all options. Contact Tolomatic with any questions.

ABT
MXP
BC2
BC3
BC4
LS
MG
CC
PB
ENGR

Tolomatic™
EXCELLENCE IN MOTION

ENGINEERING RESOURCES

ABT
MXP
BC2
BC3
BC4
LS
MG
CC
RB
ENGR

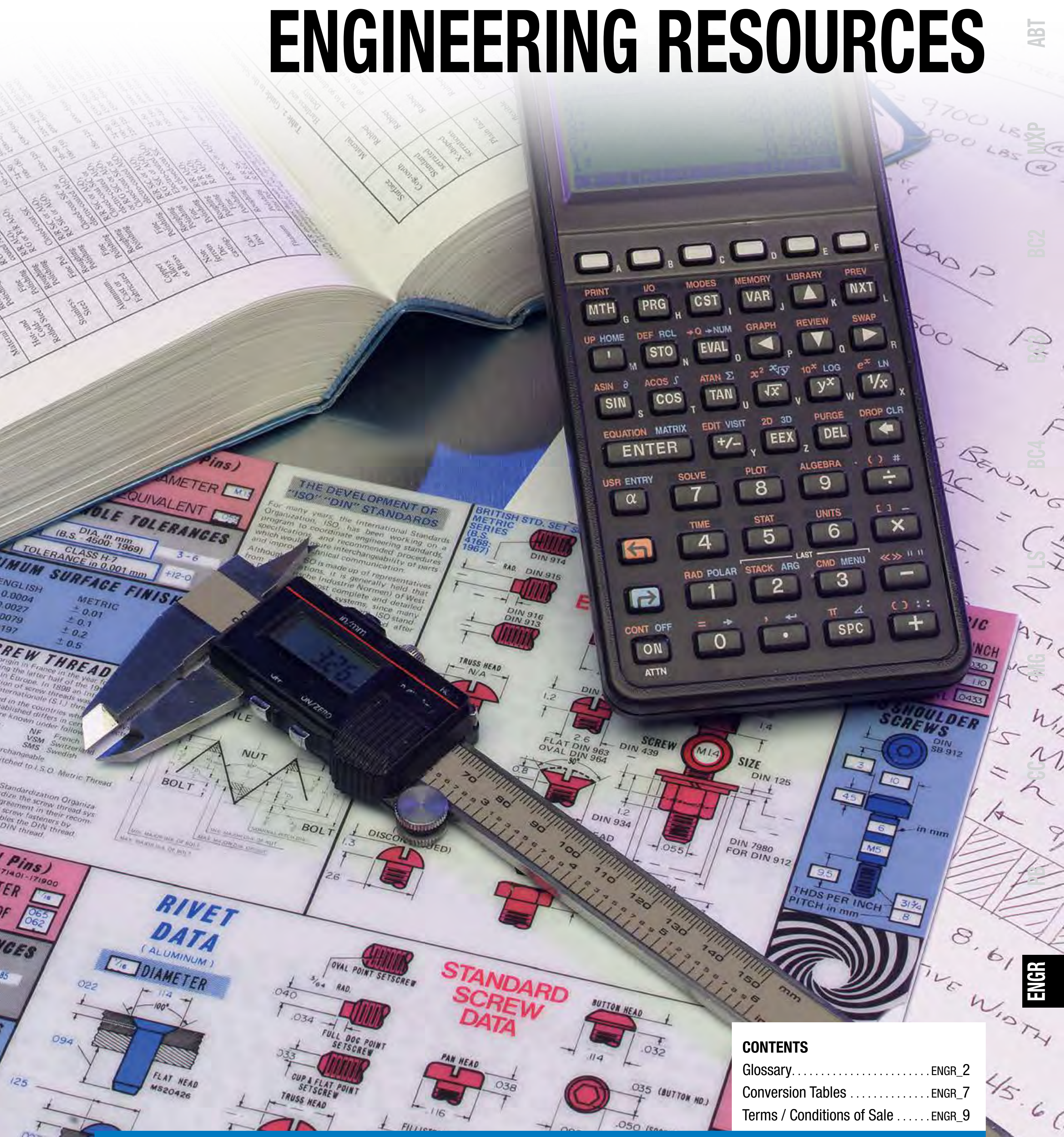

Glossary

A

ACCELERATION
The change in velocity as a function of time. Acceleration usually refers to increasing velocity, and deceleration to decreasing velocity.

ACCURACY
A measure of the difference between expected position and actual position.

ACTUATOR
A mechanism for moving or controlling something indirectly instead of by hand.

ADJUSTABLE SHOCK ABSORBERS
Used on BC2 an BC3 band cylinders to decelerate heavy loads at high velocities. Tolomatic offers light and heavy duty shock absorbers. The sizing and selection software will automatically choose the correct either light duty or heavy duty as required. When shock absorbers are used on the cylinder internal cushions are not operational. Note: Shock absorber is most effective when stopping load at its center of gravity.

AMBIENT TEMPERATURE
The temperature of the cooling medium, usually air, immediately surrounding the motor or another device.

ANODIZING
Protective treatment for aluminum that involves subjecting the metal to electrolytic action in a chemical bath, to create a protective film of aluminum oxide with a very smooth finish. The process is similar to that of hardcoating, but the latter involves the use of a different, more complex chemical bath and results in a thicker, rougher, extremely brittle coating of aluminum oxide.

AUXILIARY CARRIER
An option for band cylinders or linear slides that increases the load capacity of the cylinder as well as increasing the capacity of bending moment about the Y axis. Note: internal cushion will not work when auxiliary carrier ordered without piston, it will be necessary to add external shock absorbers.

AVERAGE VELOCITY
Velocity calculations for all rodless cylinders need to differentiate between final velocity and average velocity. For example: Cycling a 100 inch BC3 model in one direction in one second yields an average velocity of 100 inches per second. To properly determine the inertia forces for cushioning, it is important to know the final (or impact) velocity. Rodless cylinders accelerate and decelerate at each end of the stroke. Therefore this acceleration must be considered. If final velocity cannot be calculated directly, a reasonable guideline is to use 2X average velocity.

AXIAL LOADING
A load with a force directed along an axis, such as a shaft.

B

BALL BEARING
A bearing where the journal turns upon loose, hardened steel balls that roll easily in a race.

BAND CYLINDER
A the name for a rodless cylinder using Tolomatic's unique band retention system. Band cylinders feature a central slot. A band-type cylinder uses a bracket directly mounted to the cylinder piston to transmit force. The bracket passes between two bands which then seal the cylinder. The inner sealing band creates a tight metal to metal seal with the internal diameter of the cylinder bore. An outer dust band keeps dust and grit away from the sealing band. Elastomer strips provide a positive, non-magnetic lock. Tolomatic models include: BC2, BC3, BC4

BAR
The SI Metric unit of pressure equal to one million Dynes per square centimeter. The bar is used to measure both pneumatic and hydraulic pressure. One Bar is equal to 14.5038 pounds per square inch. It is also nearly equivalent to one atmosphere of pressure.

BASE MOUNT
Base mounting linear slides may be accomplished by fastening directly to "T" slot nuts provided in the base of the slide or by using the base mounting.

BC2 BAND CYLINDER
The second generation of the original band cylinder, introduced in 1986.

BC3 BAND CYLINDER
This band cylinder, introduced in 1995, incorporates a ball bearing system in the carrier for high performance.

BC4 BAND CYLINDER
Introduced in 1996, the BC4 is an economical choice for supported loads.

BENDING MOMENT
Equivalent torque produced by a force displaced by a known distance from the carriage.

BREAKAWAY
The minimum amount of force or pressure required to cause the initial movement of a given device such as a cable cylinder piston, a brake piston, or a rotary actuator through a full stroke.

BRITISH THERMAL UNIT (BTU)
The amount of heat required to raise the temperature of one pound of water by one degree Fahrenheit.

BUNA-N
A widely used copolymer (artificial rubber) used for making seals. Buna-N seals should never be used with automotive brake fluid.

C

CABLE
A wire rope made of twisted strands of material. In the case of cable cylinders, cables are made of strands of galvanized steel which are twisted together in bundles of seven strands each. These bundles, in turn, are twisted around each other. The resulting cable is coated with an extruded nylon covering.

Glossary

CABLE ASSEMBLY

A sub-assembly consisting of the cable ferrules, terminals and gland seals.

CABLE CYLINDER

A rodless cylinder using cables to transmit force from a piston.

CABLE CYLINDER REPAIR KIT

A sub-assembly consisting of two cable assemblies and the internal seals (two piston seals, two cushion seals and two tube-sealing O-rings) required to keep a cable cylinder operational.

CALIPER DISC BRAKE

A form of brake, used to retard, stop or hold action. The brake is called a "caliper" because it is mounted over a rotating disc to which it applies a friction member (puck) to slow, stop or hold the disc.

CARRIER

Attached to band cylinder or linear slide with bearing system the carrier supports and moves the load. Tolomatic options include: Auxiliary carrier, Dual 180 carrier (BC3 only), Long Carrier (BC4 only).

CENTER OF GRAVITY

(Center of Mass) The point at which the entire weight of a body may be considered as concentrated so that if supported at this point the body would remain in equilibrium in any position.

CLEVIS

The name given to the U-shaped cable connecting bracket on a Tolomatic cable cylinder.

COEFFICIENT OF FRICTION

The measurement of friction of one object sliding across another. Symbolized by the Greek letter Mu (μ) it is defined as the tangent of the angle of repose of a static body. The coefficient is expressed in decimal values (clean iron on clean iron is 1.0, while metal on solid rubber may range from 1.0 up to 4.0). When objects are wet, the coefficient of friction decreases.

CONFIGURATOR

Name given to the software that uses the configuration string to give instructions to the factory with correct specifications to create your built-to-order actuator.

CONFIGURATOR STRING

A series of code letters and numbers that Tolomatic uses to create built-to-order actuators.

CONSTRAINT

Guided and supported in a particular direction, through the use of an external guidance and bearing system.

CUSHION

A means of slowing down a cylinder piston at the end of its stroke by using an exhaust port with an orifice small enough to restrict the velocity at which the pressure fluid is exhausted.

CUSTOM PRODUCTS

These products don't resemble any of the products seen in the Tolomatic catalogs. Tell us your performance requirements, we can build a custom product for you.

CYCLE

1) A sequence of operations that is repeated regularly.
2) The time it takes for one such sequence to occur.

CYCLE RATE

The total number of times a complete motion is made from start and return to start in a specific period of time.

D

DEAD LENGTH

Dead length is the part of the band cylinder or linear slide required for mounting and mechanisms. The overall length of a band cylinder or linear slide is the stroke length plus the dead length.

DECELERATION

The opposite of acceleration. Deceleration means diminished velocity or slowing down.

DEFLECTION

A measurement of the amount of bend under the weight of a load, such as that to which a load-supporting rod or cable is subject.

DIE-CAST

A metal-forming process similar to injection-molding for plastic. In Die-Casting, molten metal (usually aluminum) is injected into a mold under pressure.

DOUBLE-ACTING CABLE CYLINDER

Cable cylinder that applies equal force in two directions.

DOUBLE-PURCHASE CABLE CYLINDER

Cable cylinder that uses additional cable and pulleys to double the velocity and stroke of cable cylinders.

DUAL 180 CARRIER

Option for the BC3 that gives greater bending moments without using a larger actuator.

DUAL MAGNET

Option for BC2 with two magnets, one on each side of the carrier.

DUST BAND

Part of Tolomatic's unique band retention system, the external band.

E

EXTERNAL CUSHIONS

Shock absorbers of some sort used to decelerate the load on a rodless cylinder in cases where the load is too heavy to make use of the cylinder's internal cushions.

EXTERNAL STOPS

Stops used on the outside of a vane-type rotary actuator to limit the rotation of the unit short of the unit's full cycle.

F

FINAL VELOCITY

Velocity calculations for all rodless cylinders need to differentiate between final velocity and average velocity. For example: Cycling a 100 inch BC3 model in one direction in one second yields an average velocity of 100 inches per second. To properly determine the inertia forces for cushioning, it is important to know the final (or impact) velocity. Rodless cylinders accelerate and decelerate at each end of the stroke. Therefore this acceleration must be considered. If final velocity cannot be calculated directly, a reasonable guideline is to use 2X average velocity.

FLOATING MOUNT (BAND CYLINDERS, MAGNETICALLY COUPLED CYLINDERS)
An option for use in applications where the load is not guided and supported by the Tolomatic actuator, or when compensating for nonparallelism.

FOOT MOUNT
A mounting plate that attaches a cylinder head to mount the cylinder to a flat surface at a 90° angle.

FORCE
An agency or influence that if applied to a free body results chiefly in an acceleration of the body and sometimes in elastic deformation and other effects.

4 PORTED HEAD
The BC2 features standard 3 ported heads but can be ordered with an additional 4th port in the underside of the head for additional mounting flexibility.

FRICTION
Resistance to relative motion between two bodies in contact, such as steel sliding on steel.

H

HALL-EFFECT D.C. SWITCH
A magnetically-controlled transistor switch controlling DC power. It has no moving parts and theoretically unlimited contact life.

HEAD
A metal component mounted at each end of a rodless pneumatic cylinder. With a cable cylinder, the head has a pulley, ports, mounting holes and provides sealing. On a Band Cylinder, the head provides tube sealing, fluid ports and mounting holes.

HUB
A means of attaching a sprocket, pulley or disc to a shaft.

I

INCH-POUND
A unit of measure of torque. It is derived from a given force in pounds acting at a given radius in inches (pounds multiplied by inches = inch-pounds). An inch-pound is 1/12th of a foot-pound. Inch-pounds may be converted to the SI Metric equivalent of Newton-meters by multiplying them by 0.1129848. Newton-meters may be converted to inch-pounds by multiplying them by 8.850748.

INERTIA
A measure of an object's resistance to a change in velocity. The larger an object's inertia, the larger the torque required to accelerate or decelerate it. Inertia is a function of an object's mass and shape.

K

KEY
A demountable machine part, which, when assembled into a keyseat, provides a positive means for transmitting torque between two other machine parts.

KEYWAY
An axially-located groove in the length of a shaft along which a key may be located.

KINETIC ENERGY
The ability to do work based on motion. It is found by multiplying half the mass by the square of the velocity.

L

LIMIT SWITCH
A switch that is actuated by some part or motion of a machine or equipment to alter the electrical circuit associated with it.

LINEAR SLIDE
A rodless cylinder using the same unique band retention system as the band cylinder. The Linear Slide uses a wider extrusion with steel shafts and bearings for additional load support. Tolomatic model: LS

LOAD
A mass or weight supported by the carrier (rodless cylinders) or tooling plate (rod cylinder slides).

LONG CARRIER
An option available for the BC4 the long carrier increases the My and Mz moment load capacity. It also gives a larger mounting surface and virtually eliminates chatter for vertical cantilever loads.

M

MAGNETICALLY COUPLED ACTUATOR
Rodless cylinder and slides featuring a magnetic couple between the piston and moving carrier.

MAGNETIC COUPLING FORCE
The force created between the piston magnets and the moving carrier (measured in pounds).

MODIFIED STANDARD PRODUCTS
Tolomatic can easily accommodate your special needs. Our standard products are often customized with extra mounting holes, different materials and other requests. This can often be done within our normal 5 day production time. We welcome modifications as well as completely new custom products.

N

NEEDLE BEARING
A type of roller bearing where the journal turns on small-diameter, hardened needle-like rollers which roll easily in a metal race.

O

O-RING
A ring of synthetic rubber with a circular cross-section, used as a gasket or seal.

P

PARALLEL PORT
Metric versions of the BC2, BC3, BC4 and LS have the choice of parallel port and taper port.

PISTON
A sliding component moved by fluid pressure. It usually consists of a short, solid metal cylinder within a cylindrical vessel in which it moves back and forth.

Glossary

PORT
In pneumatic units, the area to make connection to air lines that supply power to the actuator. In electrical units: a connecting unit between a data link and a device.

POUNDS PER SQUARE INCH OR PSI
A measurement of pressure in the U.S. customary system. By way of comparison, the weight of the atmosphere (one atmosphere) is 14.7 pounds per square inch, at sea level. It is used to express pressure in both pneumatic and hydraulic-powered systems. In the SI Metric system, pressure is measured in Bars. To covert PSI to Bars, take the PSI figure and multiply it by 0.0689476.

PRESSURE
The force or thrust exerted over a surface divided by its area. In the U.S. customary system, pressure is expressed as Pounds per Square Inch (PSI). In the SI Metric system, it is expressed in Bars.

PROXIMITY SENSOR
An LED-equipped device for sensing end-of-stroke on cylinder slides. Proximity sensors supply either a sourcing signal or a sinking signal to a device such as a programmable logic controller.

PULLEY
A sheave or small wheel with a grooved rim used with a cable cylinder to change the direction and point of application of the pulling force generated by the cylinder's piston.

Q

QUAD RING
A sealing ring of synthetic rubber which has 4 sealing lobes and is capable of sealing in two directions.

R

REED SWITCH
Tolomatic's Form A Reed Switch is an LED-equipped 0.5 ampere switch consisting of ferromagnetic blades brought into contact when a magnet passes nearby. Reed switches are used for signalling position only.

RELATIVE HUMIDITY
A ratio that indicates the amount of water vapor in the air. It is usually expressed as a percentage. At any temperature, it is the amount of water vapor in the air, divided by the amount that would be present at saturation.

RMS (ROOT MEAN SQUARE)
An industry-accepted standard for measuring the smoothness of a surface finish. Under a microscope, all surface finishes have peaks and valleys. The more peaks and valleys, the rougher the finish and the higher the RMS value. The smaller the RMS number, the smoother the finish.

ROCKWELL
Industry-accepted standard for definition of hardness.

ROD CYLINDER
A cylinder using a rod attached to its piston to transmit force. Tolomatic models include: RCS and PB2.

RODLESS CYLINDER
An actuator that contains the stroke within the cylinder itself. Tolomatic models include: BC2, BC3, BC4, LS, MG, MGS, CC, SA, DP, and TC.

ROLLER BEARING
An anti-friction device consisting of a journal which rests on free-rolling, hardened cylinders in a race.

S

SCHEMATIC
A diagram of a circuit in which symbols illustrate circuit components.

SEAL
An object used to retain air pressure, water, hydraulic fluid or oil in a vessel. In the Tolomatic product line, seals are made of an elastomer, which is any of a variety of synthetic rubber compounds.

SEALING BAND
The stainless steel strap which is part of Tolomatic's unique band retention system, the internal band.

SHIELDING
The practice of confining the electrical field around a conductor to the primary insulation of the cable by putting a conducting layer over and/or under the cable insulation. (External shielding is a conducting layer on the outside of the cable insulation. Strand or internal shielding is a conducting layer over the wire insulation.)

SHOCK ABSORBERS
A self contained hydraulic device commonly used on rodless cylinders, rodless slides and rod cylinder slides to decelerate heavy loads at high velocities.

SIGNAL
The event, phenomenon, or electrical quantity that conveys information from one point to another.

SINGLE-ACTING CABLE CYLINDER
Cable cylinder that applies force in one direction and uses gravity (generally) to return to home position.

SINGLE END PORTING
Single end porting simplifies air hook up, allows running air lines to just one end of the actuator. Unless otherwise specified single end porting is factory installed on the right side of the actuator. Available for the BC3 and BC4.

SNAP-IN SEAL®
A unique method of installing seals in cable cylinder heads without using tools. It includes a plastic washer, which, when pulled into a cable cylinder head cable port, snaps into a groove and holds the seal arrangement in place.

SOLID STATE DEVICES
Electronic components that control electron flow through solid materials (e.g., transistors, diodes, or integrated circuits).

STROKE LENGTH
Stroke length is the distance

that the carrier and its load will move on the band cylinder or linear slide.

SURGE
A transient variation in the current or potential at a point in the circuit.

SWITCH MAGNETS
Located on the carrier or piston magnets are needed for switches to sense position of carrier. On the BC3 and BC4 the switch magnet is a standard feature, attached to the piston. On the BC2 and LS the switch magnet is only included if switch is ordered. Magnets are easily inserted into carrier for field retrofitting.

SWITCH MAGNETS (DUAL)
The BC2 optionally can have dual switch magnets, one on each side of the carrier.

SWITCHES
For signaling position Tolomatic has 5 different switches available. These switches are available with a 5 meter lead, or with a quick-disconnect connector and 5 meter lead.

SYSTEM
A collection of units combined to work as a larger integrated unit having the capabilities of all of the separate units.

T

T-NUTS
For intermediate support, tube support brackets can be mounted to the BC2, BC3, and BC4 models. For the BC3 and BC4 the T-Nuts, that are needed for the brackets, must also be ordered.

TAPER PORT
Metric versions of the BC2, BC3, BC4 and LS have the choice of parallel port and taper port.

TENSILE STRENGTH
The greatest longitudinal stress a substance can bear without permanent deformation.

TERMINAL
A threaded device attached to the end of a cable cylinder assembly for convenience in making connections and adjustments. One terminal is attached to the piston, while the other is attached to the bracket (clevis).

TOLERANCE
A specified allowance for error from a desired or measured quantity.

TORQUE
A force that produces rotation. A turning or twisting force. (From the Latin torquere - to twist. Also the root word for torture.)

TRACK CABLE CYLINDER
A cable cylinder with hardened ground shafts and a guided carrier within linear bearings, giving the cylinder the ability to guide and support moderate work loads.

TRIAC AC REED SWITCH
These switches are designed for signaling end-of-stroke position to devices such as programmable controllers. They can be used to operate ac relays and solenoids if a protection circuit is used and if current and voltage limits are observed.

TUBE DEFLECTION
Due to the nature of loads and aluminum extrusions tube deflection will occur if cylinder (linear slide) is supported only on the ends without tube supports at recommended intervals along length of cylinder.

TUBE SUPPORTS
Optional accessory for band cylinders and linear slides (base mount) to prevent tube deflection.

U

U-CUP
A synthetic rubber component with lips along its inner and outer circumferences giving a cross-section the appearance of the letter “U”. When under pressure, the lips flare out, providing a tight seal in one direction and minimal drag from the non-pressurized side.

UNITS
U.S. customary: A system of weights and measures based on the pound and inches. Metric: A decimal system of weights and measures based on the kilogram and meter.

V

VALUE
A number that represents a computed or assigned quantity; or, a number contained in a data table or data file word.

VITON®
A DuPont Chemical Co. trademark for a fluorocarbon rubber used in high temperature applications. At Tolomatic, Viton® is used for seals in high temperature situations and for brakes designed to be operated with non-flammable hydraulic fluids such as phosphate-ester.

VOLT
Unit of electromotive force. It is the difference of potential required to make a current of one ampere flow through a resistance of one ohm.

VOLTAGE
The term most often used in place of electromotive force, potential, potential difference, or voltage drop. It describes the electric pressure that exists between two points and is capable of producing a flow or current when a closed circuit is connected between the two points.

VOLTAGE RATING
The maximum voltage at which a given device may be safely maintained during continuous use in a normal manner. It is also called working voltage.

W

WATT
A unit of power or a rate of doing work. The power dissipated by a one ohm resistor with one ampere of current is one watt.

Conversion Tables

To convert from A to B, multiply by entry in table

LENGTH		B					
		in	ft	yd	mm	cm	m
A	in	1	0.0833	0.028	25.4	2.54	0.0254
	ft	12	1	0.333	304.8	30.48	0.3048
	yd	36	3	1	914.4	91.44	0.914
	mm	0.03937	0.00328	0.00109	1	0.1	0.001
	cm	0.3937	0.03281	0.0109	10	1	0.01
	m	39.37	3.281	1.09	1000	100	1

MASS		B				
		gm	kg	slug	lb(m)	oz(m)
A	gm	1	0.001	6.852 x 10^{-5}	2.205 x 10^{-3}	0.03527
	kg	1000	1	6.852 x 10^{-2}	2.205	35.274
	slug	14590	14.59	1	32.2	514.72
	lb(m)	453.6	0.45359	0.0311	1	16
	oz(m)	28.35	0.02835	1.94 x 10^{-3}	0.0625	1

PRESSURE		B						
		atm	bar	millibar	lbs/sqr ft (PSF)	lbs/sqr in (PSI)	N/sqr m (NSM)	N/sqr mm (NSMM)
A	atm	1	1.01325	1013.25	2,116.22	14.6454	101,325	0.101325
	bar	0.986923	1	1000	2088.54	14.5037	100,000	0.1
	millibar	0.000987	0.001	1	2.08854	0.014504	100	0.0001
	PSF	0.000473	0.000479	0.478803	1	0.006944	47.88	0.000048
	PSI	0.068046	0.068948	68.94757	144	1	6,894.757	0.006895
	NSM	0.00001	0.00001	0.01	0.020885	0.000145	1	0.000001
	NSMM	98,692	10	10,000	20885.43	145.0377	1,000,000	1

FORCE		B					
		lb(f)	N	dyne	oz(f)	kg(f)	gm(f)
A	lb(f)	1	4.4482	4.448 x 10^{5}	16	0.45359	453.6
	N	0.22481	1	100,000	3.5967	0.10197	101.97
	dyne	2.248 x 10^{-6}	0.00001	1	3.59 x 10^{-5}	1.02 x 10^{-6}	0.00102
	oz(f)	0.0625	0.27801	2.78 x 10^{4}	1	0.02835	28.35
	kg(f)	2.205	9.80665	980,665	35.274	1	1000
	gm(f)	2.205 x 10^{-3}	0.0098	980.665	0.03527	0.001	1

POWER		B					
		Watts	KW	hp (US customary)	hp (Metric)	ft-lb/s	in-lb/s
A	Watts	1	1 x 10^{-3}	1.34 x 10^{-3}	1.36 x 10^{-3}	0.74	8.88
	kw	1000	1	1.34	1.36	738	8880
	hp (US customary)	746	0.746	1	1.01	550	6600
	hp (Metric)	736	0.736	0.986	1	543	6516
	ft-lb/s	1.36	1.36 x 10^{-3}	1.82 x 10^{-3}	1.84 x 10^{-3}	1	12
	in-lb/s	0.113	1.13 x 10^{-4}	1.52 x 10^{-4}	1.53 x 10^{-4}	8.3 x 10^{-2}	1

ABBREVIATED TERMS

atm = atmosphere (STD)
C = Celsius
cm = centimeter
F = Fahrenheit
ft = foot
g = gravity
gm = gram
gm(f) = gram force
hp = horse power
in = inch
kg = kilogram
kg(f) = kilogram force
kw = Kilowatt
lb(f) = pound force
lb(m) = pound mass
min = minute
mm = millimeter
m = meter
N = Newton
oz(f) = ounce force
oz(m) = ounce mass
rad = radians
rpm = revs per minute
rps = revs per second
s = seconds
sqr = square

ABT
MXP
BC2
BC3
BC4
LS
MG
CC
PB
ENGR

Conversion Tables

To convert from A to B, multiply by entry in table

TORQUE		B							
		dyne-cm	gm-cm	oz-in	kg-cm	lb-in	N-m	lb/ft	kg/m
A	dyne-cm	1	1.019×10^{-2}	1.416×10^{-5}	1.0197×10^{-6}	8.850×10^{-7}	10^{-7}	7.375×10^{-6}	1.019×10^{-6}
	gm-cm	980.665	1	1.388×10^{-2}	.001	8.679×10^{-4}	9.806×10^{-5}	7.233×10^{-5}	10-5
	oz-in	7.061×10^{4}	72.007	1	7.200×10^{-2}	6.25×10^{-2}	7.061×10^{-3}	5.208×10^{-3}	7.200×10^{-4}
	kg-cm	9.806×10^{5}	1000	13.877	1	0.8679	9.806×10^{-2}	7.233×10^{-2}	0.001
	lb-in	1.129×10^{6}	1.152×10^{3}	16	1.152	1	0.112	8.333×10^{-2}	1.152×10^{-2}
	N-m	10^{7}	1.019×10^{4}	141.612	10.197	8.85	1	0.737	0.102
	lb-ft	1.355×10^{7}	1.382×10^{4}	192	13.825	12	1.355	1	0.138
	kg-m	9.806×10^{7}	105	1.388×10^{3}	100	86.796	9.806	7.233	1

NOTE: Mass inertia = $\frac{\text{wt. inertia}}{g}$

INERTIA (ROTARY)		B									
		gm-cm^2	oz-in^2	gm-cm-s^2	kg-cm^2	lb-in^2	oz-in-s^2	lb-ft^2	kg-cm-s^2	lb-in-s^2	lb-ft-s^2 or slug-ft-s^2
A	gm-cm^2	1	5.46×10^{-2}	1.01×10^{-3}	38,992	3.417×10^{-4}	1.41×10^{-5}	2.37×10^{-6}	1.01×10^{-4}	8.85×10^{-7}	7.37×10^{-4}
	oz-in^2	182.9	1	0.186	0.182	0.0625	2.59×10^{-2}	4.34×10^{-4}	1.86×10^{-4}	1.61×10^{-4}	1.34×10^{-5}
	gm-cm-s^2	980.6	5.36	1	0.9806	0.335	1.38×10^{-2}	2.32×10^{-3}	38,992	8.67×10^{-4}	7.23×10^{-5}
	kg-cm^2	1,000	5.46	1.019	1	0.3417	1.41×10^{-2}	2.37×10^{-3}	1.019×10^{-3}	8.85×10^{-4}	7.37×10^{-5}
	lb-in^2	2.92×10^{3}	16	2.984	2.925	1	4.14×10^{-2}	6.94×10^{-3}	2.96×10^{-3}	2.59×10^{-3}	2.15×10^{-4}
	oz-in-s^2	7.06×10^{4}	386.08	72	70.615	24.13	1	0.1675	7.20×10^{-2}	6.25×10^{-2}	5.20×10^{-3}
	lb-ft^2	4.21×10^{5}	2,304	429.71	421.4	144	5.967	1	0.4297	0.3729	3.10×10^{-2}
	kg-cm-s^2	9.8×10^{5}	5.36×10^{3}	1,000	980.66	335.1	13.887	2.327	1	0.8679	7.23×10^{-2}
	lb-in-s^2	1.129×10^{4}	6.177×10^{3}	1.152×10^{3}	1.129×10^{3}	386.08	16	2.681	1.152	1	8.33×10^{-2}
	lb-ft-s^2	1.355×10^{7}	7.41×10^{4}	1.38×10^{4}	1.35×10^{4}	4.63×10^{3}	192	32.17	13.825	12	1

ANGULAR VELOCITY		B			
		deg/s	rad/s	rpm	rps
A	deg/s	1	1.75×10^{-2}	0.167	2.78×10^{-3}
	rad/s	57.3	1	9.55	0.159
	rpm	6	0.105	1	1.67×10^{-2}
	rps	360	6.28	60	1

TEMPERATURE
°F = (1.8 x °C) + 32
°C = .555 x (°F -32)

LINEAR VELOCITY		B					
		in/min	ft/min	in/sec	ft/sec	mm/sec	m/sec
A	in/min	1	0.0833	0.0167	1.39×10^{-3}	0.42	4.2×10^{-4}
	ft/min	12	1	0.2	0.0167	5.08	5.08×10^{-3}
	in/sec	60	5	1	0.083	25.4	0.0254
	ft/sec	720	60	12	1	304.8	0.3048
	cm/sec	23.62	1.97	0.3937	0.0328	10	0.01
	m/sec	2362.2	196.9	39.37	3.281	1000	1

GRAVITY
(Acceleration Constant)
g = 386 in/sec^2 = 32.2 ft/sec^2 = 9.8 m/sec^2

Terms and Conditions of Sale

1. GENERAL:

Tolomatic Inc. is the seller and is referred to herein as “Tolomatic”. Any person buying or offering to buy Products from Tolomatic is the “Buyer.” The products, including replacement products, sold by Tolomatic are the “Products.”

2. ACCEPTANCE APPLICATION OF THESE TERMS AND CONDITIONS

a. The placing by a Buyer of a purchase order with Tolomatic shall be deemed an offer made to Tolomatic to purchase Products. Where Tolomatic accepts a purchase order, it shall be subject to these terms and conditions.

b. No order placed by the Buyer shall be deemed to be accepted by Tolomatic until a written acknowledgment of order, which may include email or facsimile, is issued by Tolomatic or, if earlier, Tolomatic delivers the Products to the Buyer.

c. Where Tolomatic proposes to sell Products to Buyer quoting prices, delivery dates or specifications different than those set out in Buyer’s purchase order, or where Tolomatic otherwise provides a price quotation at Buyer’s request, Tolomatic may invite Buyer to place a new purchase order the acceptance of which by Tolomatic will form a contract for the sale of the Product to Buyer, subject to these terms and conditions. Tolomatic may also provide a quotation or offer to sell Products to Buyer which Buyer may accept. In that case, Buyer’s acceptance of the offer or quotation will form a contract for the sale of the Product to Buyer, subject to these terms and conditions.

d. The placing of a purchase order by the Buyer, the confirmation by the Buyer of Tolomatic’s acceptance of a purchase order, the acceptance of the delivery of Products and payment by the Buyer of the price or any down payment or any security for payment and any other confirmation of the purchase order on the part of the Buyer (including any agreed variations of the purchase order) shall be deemed to be an acceptance and/or confirmation by the Buyer of these terms and conditions. Tolomatic hereby rejects any additional or different terms contained in any purchase order or other communication previously or hereafter presented by Buyer to Tolomatic. No additional or different terms or conditions other than the terms and conditions set out herein (together with the content of the purchase order accepted by Tolomatic) will have any force or effect, except where specifically agreed by Tolomatic in writing.

e. These terms and conditions together with the details of any accepted purchase order form the entire agreement between Tolomatic and Buyer in relation to the sale and supply of Products by Tolomatic to Buyer, and there are no conditions to that agreement that are not expressly contained in these terms and conditions.

f. Any variation, cancellation or waiver of these terms and conditions shall only be effective if made in writing and signed by a duly authorized representative of Tolomatic.

3. CHANGES AND CANCELLATION

Once Tolomatic has accepted Buyer’s order, Buyer cannot modify or cancel the order, in whole or in part, without Tolomatic’s written consent.

4. MATERIALS FURNISHED BY TOLOMATIC

Catalogs and other materials furnished by Tolomatic and other information provided in connection with Products, including price lists, are subject to modification by Tolomatic and are provided for information only. Prices are binding only on acceptance of purchase orders (or if Tolomatic provided Buyer a full quotation which was accepted by Buyer).

5. PRICES, TAXES, FREIGHT AND HANDLING

a. The prices for Products will be those set out in an accepted purchase order or (if relevant) in Tolomatic’s quotation/proposal accepted by Buyer.

b. If Buyer orders any installation or similar services, unless a fixed price or rates are specifically agreed, Buyer shall pay for such services on a labor plus materials basis at the standard rates charged by Tolomatic from time to time.

c. Unless Tolomatic specifies in writing that any quotation is binding for a specified period of time, quoted prices are subject to change at any time prior to acceptance of a purchase order. Price quotations shall expire automatically without notice thirty (30) days from the date thereof (unless otherwise specified in the quotation/proposal).

d. Prices quoted by Tolomatic assume that the entire quantity of Products ordered will be shipped at completion of manufacture in accordance with the purchase order or in accordance with a delivery schedule accepted by Tolomatic. If the Buyer requests partial shipment or requests variations in quantities, the original price quotation will no longer apply.

e. Unless otherwise agreed in writing by the parties, shipping, custom shipping containers, freight and insurance costs are not included in the price, nor are any customs, duties, sales, use, value added or similar taxes which shall be payable by the Buyer at its sole responsibility. If notwithstanding the above, Buyer and Tolomatic agree that Tolomatic should bear any such costs or pay such taxes, they shall be added to the price payable by the Buyer.

f. If prices are quoted including any taxes, duties, third party fees, freight or insurance costs, Tolomatic may adjust the price if such costs or rates of tax or fees increase after acceptance of the purchase order.

g. If Tolomatic is required by law to charge Buyer any sales tax, value added tax or other taxes, charges or levies, such amounts shall be in addition to quoted prices and shall be added to invoices payable by Buyer.

6. MINIMUM BILLING

Orders amounting to less than $35.00 net will be billed at $35.00.

7. DELIVERY, SCHEDULE AND INSPECTION

a, Unless agreed otherwise in writing by Tolomatic, Products shall be delivered to Buyer Ex Works (Incoterms 2010), Tolomatic’s facilities at 3800 County Road 116, Hamel, Minnesota 55340. Title and all risk or loss or damage in transit shall pass to Buyer at that time.

b. Any delivery dates furnished by Tolomatic are estimates only and do not bind Tolomatic to deliver the Products on the dates indicated. Tolomatic reserves the right to make partial shipments and to submit separate invoices to Buyer for each such shipment.

c. Where Products are delivered Ex Works, Buyer may specify the carrier or indicate its preferred transportation method (which shall be at Buyer’s costs) by giving written notice to Tolomatic which must be received at least 5 working days prior to the expected date of shipment by Tolomatic to the Ex Works delivery point. In the absence of a notice requesting a particular carrier or method of delivery, transportation shall be by any method of transport and any carrier chosen by Tolomatic and shall in any event be at the sole risk and expense of Buyer.

d. If the quantity of products received by Buyer is less than the quantity shown in the purchase order or invoice or if the products received by Buyer are damaged in transit or missing, Buyer will be responsible to notify the carrier and insurer and to file any necessary claims.

e. If Buyer requires Products to be inspected by Buyer’s representative or nominee before shipment, such inspection shall be performed with reasonable advance notice, during normal working hours on working days and be limited to plant areas designated by Tolomatic.

f. If a purchase order accepted by Tolomatic does not contain a firm shipment schedule for all the Products ordered, and Tolomatic has not received a substantial shipping order (as determined by Tolomatic in its sole discretion) within 30 days of the date the purchase order is placed, then Tolomatic has the right to give written notice to Buyer that Buyer must send Tolomatic, within such date as may reasonably be indicated in the notice, a shipping order for at least the quantity of Products specified in the notice. Unless Tolomatic receives a shipping order as specified in the notice within the specified period, Tolomatic may terminate the purchase order without liability.

8. PAYMENT

a. Unless orders are accepted on a prepayment basis, in which case payment for the Products shall be due in advance of delivery, payment for Products shall be due and payable within thirty (30) days from the date of invoice to the Ex Works delivery point. Tolomatic reserves the right to withdraw or change any credit terms at any time for purchase orders that have not yet been accepted by Tolomatic.

b. Prices shall be quoted and payable in U.S. dollars (unless agreed otherwise). All bank charges for wire transfers, letters of credits or other methods of payment shall be paid by Buyer.

c. Buyer shall pay invoices in full and shall have no right to assert any credit, set-off or counterclaim against any amount invoiced for

Terms and Conditions of Sale (cont.)

the sale or supply of Products.

d. All amounts payable to Tolomatic shall be paid in full without any withholding or deduction on account of any taxes, duties, levies or charges, unless Buyer is required by law to make such deduction or withholding. If it is so required it shall duly deduct or withhold the amount as required by law and shall, when making the payment to which the withholding or deduction relates, pay Tolomatic such additional amount as will ensure that (after the deduction or withholding) Tolomatic receives the same total amount that it would have received if no such withholding or deduction had been required.

e. Buyer shall notify Tolomatic of any invoice discrepancy within fourteen (14) days of receipt of the invoice after which time the invoice shall be deemed accepted by Buyer.

f. Tolomatic reserves the right to charge interest at the rate of 2% per month (or at the maximum rate permitted by law, if lower) on amounts not paid within 30 days of the due date of payment. Interest shall accrue from the due date for payment.

g. Tolomatic reserves the right at any time at its discretion to demand security for payment before continuing with or delivering any order. In such event, Buyer will grant a security interest in all Products to be delivered by Tolomatic to Buyer and will take all additional steps requested by Tolomatic and as otherwise necessary to enable Tolomatic to create and perfect a security interest, including if so designated by Tolomatic a purchase money security interest, in all Products delivered by Tolomatic to Buyer, including obtaining necessary consents from creditors of Buyer and executing and delivering to Tolomatic all documents related thereto.

h. If Buyer defaults in its payment obligations in regard to any shipment of Products, Tolomatic may suspend any additional shipments until Buyer cures such default and may terminate the purchase order in relation to any remaining shipments.

9. LIMITED WARRANTY

a. Tolomatic warrants that at the time of delivery, Products shall be in good condition, free from defects in material and workmanship and that Products made to order shall conform to applicable drawings or specifications as referenced in the quotation or accepted purchase order ("Product Warranty"). The Product Warranty shall expire one year from date of shipment (the "Warranty Period"). Tolomatic warrants that Buyer shall acquire good title to the Products free from third party rights. These warranties are given only to Buyer and not to any third party.

b. The Product Warranty excludes any defects or non-conformance resulting (wholly or in part) from: (i) accidental damage, mishandling, incorrect installation, negligence or other circumstances arising after delivery; (ii) the repair or alteration of the Product by any party other than Tolomatic or its authorized representative; (iii) the failure by Buyer to provide a suitable storage, use, or operating environment for the Products; (iv) Buyer's use of the Products for a purpose or in a manner other than that for which they were designed; and (v) other abuse, misuse or neglect of the Products by Buyer or any third party.

c. The Product Warranty excludes any Products not manufactured by Tolomatic. Insofar as any Products are manufactured by third parties, Tolomatic shall, insofar as it can, pass to the Buyer the benefit of all warranties given by the supplier of such Products.

d. The Product Warranty shall be limited to defects of which Tolomatic is notified within twenty-one (21) days from the date of shipment to Buyer or, in the event of latent defects, within twenty-one (21) days of the defect being discovered and provided that such notice is received within the Warranty Period. As sole remedy for the breach of the warranty in paragraph (a) above, provided that (if required by Tolomatic) all non-conforming Products are returned to Tolomatic at Buyer's cost, and provided that Tolomatic confirms the defect or non-conformance, Tolomatic shall at its option (i) replace or repair the defective or non-conforming items, or correct any defective work or non-conformance, or (ii) refund to Buyer the original purchase price of the defective or non-conforming item and reimburse to Buyer any transportation and insurance charges incurred by Buyer.

e. Any claim by Buyer against Tolomatic alleging the breach of the Product Warranty must be commenced within twelve (12) months following the date of the alleged breach.

f. In the event the parties disagree whether or not a breach of the Product Warranty has occurred, Tolomatic may (but shall not be obliged to) undertake any repairs or replacement requested by Buyer pending final settlement of the matter. If it is determined that no such breach has occurred, Buyer shall pay Tolomatic upon demand the reasonable price of the repairs, corrections, or replacements made by Tolomatic including allowances for overheads and a reasonable profit margin.

g. THE WARRANTIES EXPRESSLY MADE UNDER THESE TERMS ARE EXCLUSIVE AND GIVEN IN LIEU OF ALL OTHER REPRESENTATIONS, WARRANTIES AND COVENANTS THAT MAY BE IMPLIED BY LAW, BY CUSTOM OF TRADE, BY THESE TERMS, BY THE PURCHASE ORDER OR OTHERWISE WITH RESPECT TO THE PRODUCTS. TO THE FULL EXTENT PERMITTED BY LAW, TOLOMATIC DISCLAIMS AND BUYER WAIVES ALL SUCH REPRESENTATIONS, WARRANTIES AND COVENANTS INCLUDING BUT NOT LIMITED TO, ANY IMPLIED WARRANTIES OF MERCHANTABILITY, FITNESS FOR A PARTICULAR PURPOSE OR NON-INFRINGEMENT OF THIRD PARTY INTELLECTUAL PROPERTY RIGHTS. BUYER'S SOLE REMEDY FOR BREACH OF WARRANTY IS STATED IN PARAGRAPH (d) ABOVE.

h. No Products shall be returned without Tolomatic's prior written consent. Products which Tolomatic consents to have returned shall be shipped by Buyer at Buyer's risk and expense, freight prepaid, to such location as Tolomatic designates.

10. LIMITATION OF LIABILITY

a. Tolomatic shall in no event be liable to Buyer or any third party, whether in contract, tort (including negligence), misrepresentation, strict liability or otherwise, for any incidental, punitive, consequential, indirect or special damages, including any loss of profits or savings or anticipated profits or savings, loss of data, loss of opportunity, loss of reputation, loss of goodwill or business or potential business, however caused, even if Tolomatic has been advised of the possibility of such damages in advance.

b. Under no circumstances shall Tolomatic's liability to Buyer in connection with any purchase order or Products supplied to Buyer exceed an amount equal to the amount paid by Buyer for such Products.

c. Buyer agrees and understands that it is solely Buyer's responsibility to ensure that Products are suitable for Buyer's requirements and for the environment, facilities or machinery for which they are intended by Buyer or by its end-customer to be fitted or used. Even if Tolomatic is advised of Buyer's intended use, Tolomatic makes no representation or warranty that the Product will be suitable for that purpose. Any technical advice furnished by Tolomatic relating to the intended use of the Products is given for information only and Tolomatic assumes no obligation or liability for the advice given or the results obtained. Except insofar as specifications or drawings form part of a purchase order and the Product Warranty, to the full extent permitted by law, Tolomatic disclaims and Buyer waives all representations, warranties and covenants that may be implied from the provision by Tolomatic of technical advice or information about Product. All such advice and information are accepted by Buyer at its risk.

d. Insofar as any liability or warranty of Tolomatic cannot be limited or excluded under applicable law, including any laws that do not permit limitations on liability relating to death or personal injury, the provisions of these terms and conditions shall be construed as being subject to such legal limitations, but only if those legal provisions have effect in relation to Tolomatic's liability notwithstanding the governing law provision in Section 18 below.

11. BUYER'S RESPONSIBILITIES

a. Buyer shall be responsible for complying with any laws relating to the exportation of the Products from the United States of America and their importation into any other country and shall be solely responsible for all import duties or other relevant charges and for all costs of shipment, freight (whether by air, sea or otherwise) and insurance from the point of delivery.

b. Without limitation to paragraph (a) above, Buyer shall be responsible to ensure that the exportation of any Products to any country outside the United States of America complies with all relevant export control laws, orders, regulations and restrictions applicable to the Products, including all applicable statutory and regulatory requirements under the Arms Export Control Act (22 U.S.C. 1778), the

Terms and Conditions of Sale (cont.)

International Traffic in Arms Regulations, the Export Administration Regulations and associated executive orders, the Laws implemented by the Office of Foreign Assets Control, U.S. Department of the Treasury, U.S. Customs Regulations, and equivalent laws in any jurisdiction to which the Products are imported (collectively, "Export and Import Laws"). Upon the request of Tolomatic, Buyer will provide certificates signed by an authorized representative certifying compliance with applicable Export and Import Laws, as indicated by Tolomatic.

c. Buyer shall be responsible for the collection, remittance and payment of any or all taxes, duties, charges, levies, assessments and other fees of any kind imposed by any authority in the country of import or use of the Products in respect of the purchase, importation, sale or other use of the Products.

d. Buyer shall be responsible at its cost and expense for obtaining any import licenses or permits necessary for the entry of the Products into any territory outside the United States of America and for any import procedures. If Buyer requires Tolomatic to produce any documentation in relation to Products for any administrative or regulatory purposes, Buyer shall inform Tolomatic of the requirement as early as possible and shall provide all necessary details to Tolomatic. Tolomatic cannot guarantee that all required documentation or certifications can be provided. Tolomatic may charge Buyer for the costs of producing such documentation.

e. Paragraphs (a) to (d) above shall apply notwithstanding any agreement by Tolomatic to deliver Products to Buyer under terms other than Ex Works (except in relation to the payment of importation duties, freight and insurance if Tolomatic expressly agrees to the alteration of such terms).

f. If Buyer believes or becomes aware that a recall or other corrective action relating to Products purchased by Buyer is desirable or required by law, it shall immediately notify Tolomatic. Buyer shall cooperate with Tolomatic in carrying out any recall of Products required by law or by any regulatory authority or deemed necessary by Tolomatic, including by communicating with end-users of the Products. Tolomatic shall have sole control over the implementation of any recall or other corrective action.

g. Buyer shall maintain appropriate records to enable the tracking of Products purchased by Buyer, where required for the purpose of any testing, recall or corrective action.

12. INTELLECTUAL PROPERTY RIGHTS AND USE OF PRODUCTS

a. Buyer acknowledges that the Products, including but not limited to designs and drawings created by Tolomatic, embody valuable intellectual property rights. As between Buyer and Tolomatic, all such intellectual property rights, including all trademarks displayed on Products or their packaging or on any documentation, are solely and exclusively owned by Tolomatic.

b. Buyer acknowledges and agrees that the purchase of the Products by Buyer shall not give effect to the transfer of any title, right or interest over any such intellectual property rights or the grant of any rights in and to such intellectual property rights.

c. No license is granted or shall be implied for the use of any such intellectual property rights, and no warranty is made that use of the Products or of such intellectual property will not infringe the intellectual property rights of third parties.

13. DEFAULT

Tolomatic may, without prejudice to any other rights it may have, by notice in writing to Buyer, terminate any contract or purchase order immediately if: (a) Buyer breaches any of these terms and conditions (including any payment default), provided that if the breach can be remedied in Tolomatic's reasonable judgment, Tolomatic shall allow Buyer seven (7) days from the date of the notice to cure the breach; (b) Buyer becomes unable to pay its debts as they become due or if any bankruptcy, receivership, administration, liquidation or similar proceedings are issued or commenced against Buyer, or if Buyer makes an assignment for the benefit of creditors or has a receiver appointed for any of its assets, or permits judgment against it to remain unsatisfied for seven (7) days, or if the business or assets of Buyer are confiscated, expropriated, seized or taken over by any government agency.

14. RETURNS

No Products may be returned without first obtaining prior authorization from Tolomatic and according to Tolomatic's instructions. If accepted, all Product returns shall be subject to a minimum service charge of 35% of the invoice price and all transportation charges shall be prepaid by Buyer. Without derogation from the above, assembled Products which have been modified beyond what is offered as a standard product or built as a "Customer Special" (product that currently does not reside in Tolomatic's list of available standard products), shall in no event be returnable to Tolomatic.

15. INDEMNITY

Buyer shall defend, indemnify, and hold Tolomatic harmless from any and all liabilities, penalties, losses, damages, costs and expenses, including attorney fees, resulting from any acts or omissions of Buyer in connection with the use, installation or onward sale of Products sold by Tolomatic to Buyer, except where the claim, loss or liability arises predominantly out of a breach of the Product Warranty.

16. FORCE MAJEURE

a. Tolomatic shall not be liable to Buyer in respect of any delay or failure in the delivery of Products where such delay or failure is due to circumstances beyond its reasonable control, including but not limited to shortages of supplies, actions of government agencies, acts of nature, acts of Buyer (including any failure by Buyer to discharge its responsibilities under these terms and conditions), fire, strike, or labor dispute, war, hostilities or terrorist acts, embargoes, equipment breakdown, power failure, failures in telecommunications systems, or the inability to obtain necessary labor, material or manufacturing facilities. If any such circumstances prevent a purchase order from being performed for more than forty-five (45) days from the anticipated date of delivery, either party may terminate the purchase order by written notice to the other (provided that such notice is not received after Tolomatic confirms that it is ready to make delivery).

b. In the event of such delay, and assuming that Buyer chooses not to cancel due to such cause, the date of delivery shall be extended for a period equal to the time lost by reason of the delay.

17. SEVERABILITY

If any of these terms and conditions are held by a court or tribunal of competent jurisdiction to be illegal or unenforceable, this shall not affect the validity or enforceability of any other term, and Tolomatic and Buyer shall use all reasonable efforts to agree to modify the relevant term insofar as necessary to render it lawful and enforceable and shall replace the unlawful or unenforceable term with such modified term.

18. MISCELLANEOUS

a. Buyer acknowledges that it has not been induced to purchase the Products from Tolomatic by any representation or warranty not expressly set forth herein. These terms and conditions may not be modified except by a written document signed by an authorized representative of Tolomatic and Buyer. The paragraph headings are intended for convenience of reference only and shall not affect the interpretation of any provision.

b. These terms and conditions and the rights of the parties hereunder shall be governed by and construed in accordance with the laws of the state of Minnesota, USA, without reference to its conflict of laws rules. The parties disclaim the application of the United Nations Convention on Contracts for the International Sale of Goods to these terms and conditions.

c. Buyer shall not have the right to assign or otherwise transfer its rights or obligations under these terms and conditions except with the prior written consent of Tolomatic. These terms and conditions shall be binding on the parties and their respective successors and permitted assigns. Any prohibited assignment shall be null and void.

d. No failure by either Party to take any action or assert any right hereunder shall be deemed to be a waiver of such right. The parties are independent contractors and not agents of each other. If a copy of these terms and conditions is translated into another language, the official and binding version shall be the English language version, which shall prevail in all instances.

e. Notices shall be deemed given on the third day following domestic mailing or the seventh day following international mailing, if mailed registered or certified mail, postage prepaid, return receipt requested, or on receipt if delivered by private courier service, or by facsimile, addressed to the respective addresses of the receiving party.

ABT
MXP
BC2
BC3
BC4
LS
MG
CC
PB
ENGR

The Tolomatic Difference Expect More From the Industry Leader:

INNOVATIVE PRODUCTS
Solutions with Endurance Technology^{SM} for challenging applications.

FAST DELIVERY
Built-to-order with configurable stroke lengths and flexible mounting options.

ACTUATOR SIZING
Size and select electric actuators with our online software.

YOUR MOTOR HERE®
Match your motor to compatible mounting plates with Tolomatic actuators.

CAD LIBRARY
Download 2D or 3D CAD files for Tolomatic products.

TECHNICAL SUPPORT
Get a question answered or request a virtual design consultation with one of our engineers.

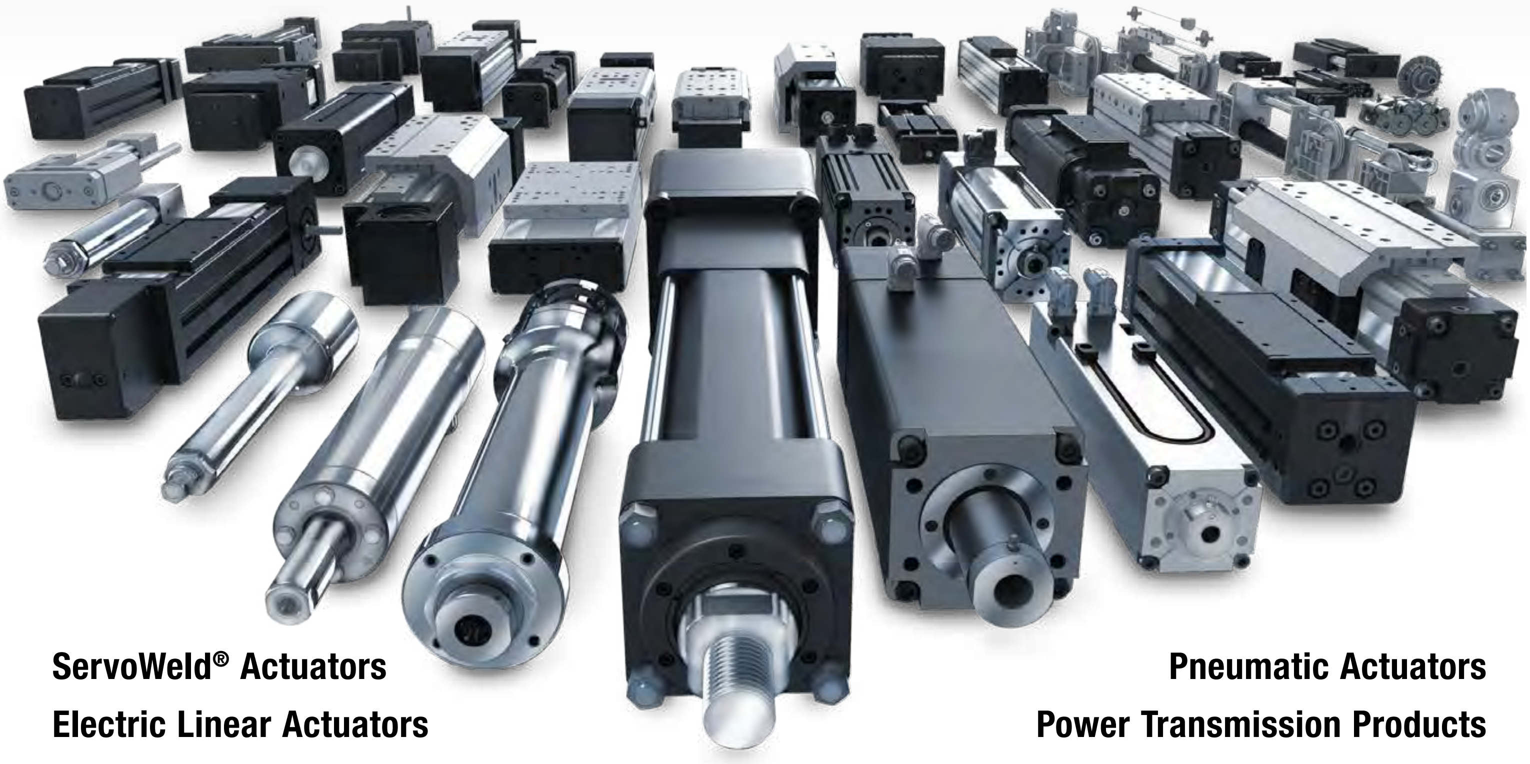

ServoWeld® Actuators

Electric Linear Actuators

Pneumatic Actuators

Power Transmission Products

MADE IN U.S.A.

Tolomatic™
EXCELLENCE *IN MOTION*

COMPANY WITH QUALITY SYSTEM CERTIFIED BY DNV
= ISO 9001 =
Certified site: Hamel, MN

USA - Headquarters
Tolomatic Inc.
3800 County Road 116
Hamel, MN 55340, USA
Phone: (763) 478-8000
Toll-Free: **1-800-328-2174**
sales@tolomatic.com
www.tolomatic.com

MEXICO
Centro de Servicio
Parque Tecnológico Innovación
Int. 23, Lateral Estatal 431,
Santiago de Querétaro,
El Marqués, México, C.P. 76246
Phone: +1 (763) 478-8000
help@tolomatic.com

EUROPE
Tolomatic Europe GmbH
Elisabethenstr. 20
65428 Rüsselsheim
Germany
Phone: +49 6142 17604-0
help@tolomatic.eu
www.tolomatic.com/de-de

CHINA
Tolomatic Automation Products (Suzhou) Co. Ltd.
No. 60 Chuangye Street, Building 2
Huqiu District, SND Suzhou
Jiangsu 215011 - P.R. China
Phone: +86 (512) 6750-8506
TolomaticChina@tolomatic.com

Visit www.tolomatic.com for the most up-to-date technical information